Fluid Flow Conditioning

August 2015

CANADA PIPELINE ACCESSORIES

CPA COMPUTATIONAL SOLUTIONS LTD.

Flow Conditioning

- There is no flow meter on the market that **needs** flow conditioning.
- All flow meters are effective without any type of flow conditioning.

Flow Conditioning

Why do we want to use flow conditioners then?

- Can eliminate up to 80 – 90% of pipeline swirl.
- Restore flow profile symmetry and eliminate distortions.
- Isolates the flow meter from upstream disturbances.
- Allows much shorter meter runs to be used with much higher repeatability.
- Improves the benefits of many USM diagnostics by providing flow stability.
- Helps with noise or pulsation problems.
- Helps balance the pressure, velocity and flow rate of meter tubes running in parallel.

- They UNLOAD the flow meter, helping it become even more accurate.

Flow Conditioning

<u>What if we have debris in our pipe?</u>

- The debris has to go somewhere, ignoring the flow conditioner won't make it disappear.
- Install a filter (or another flow conditioner UPSTREAM of the meter run to catch the debris).
- Without something to catch debris, we risk damaging or destroying any sample probes, thermo wells or any other equipment in the pipe.
- Better hope there isn't a compressor or turbine downstream somewhere.
- If the gaskets are unraveling, recommend switching to Flexitallic CGI gaskets with an inner ring to keep the windings intact.

Flow Conditioning

- Using a flow meter without flow conditioning is simply giving up measurement accuracy and giving up money.
- Is our flow measurement ‘good enough’?
- Shouldn’t we aim for it to be the best, most accurate, lowest uncertainty measurement that is available with our current state of technology?

What is a Flow Conditioner?

What is a Flow Conditioner?

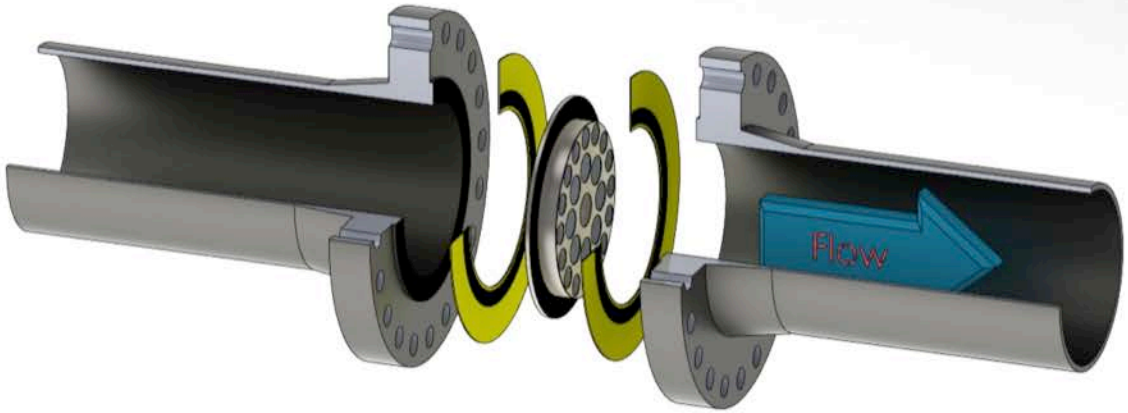

What is a Flow Conditioner?

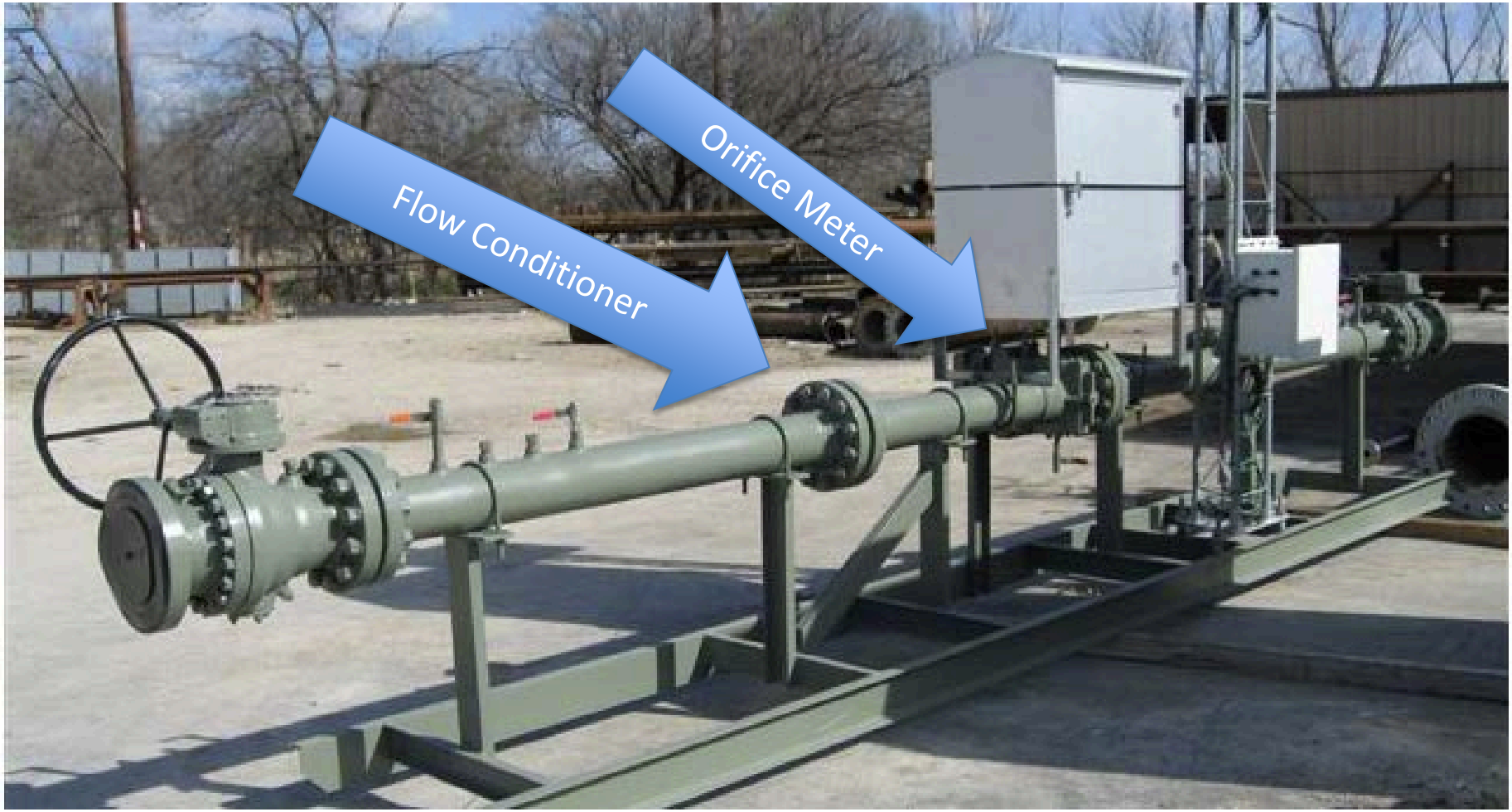

What is a Flow Conditioner?

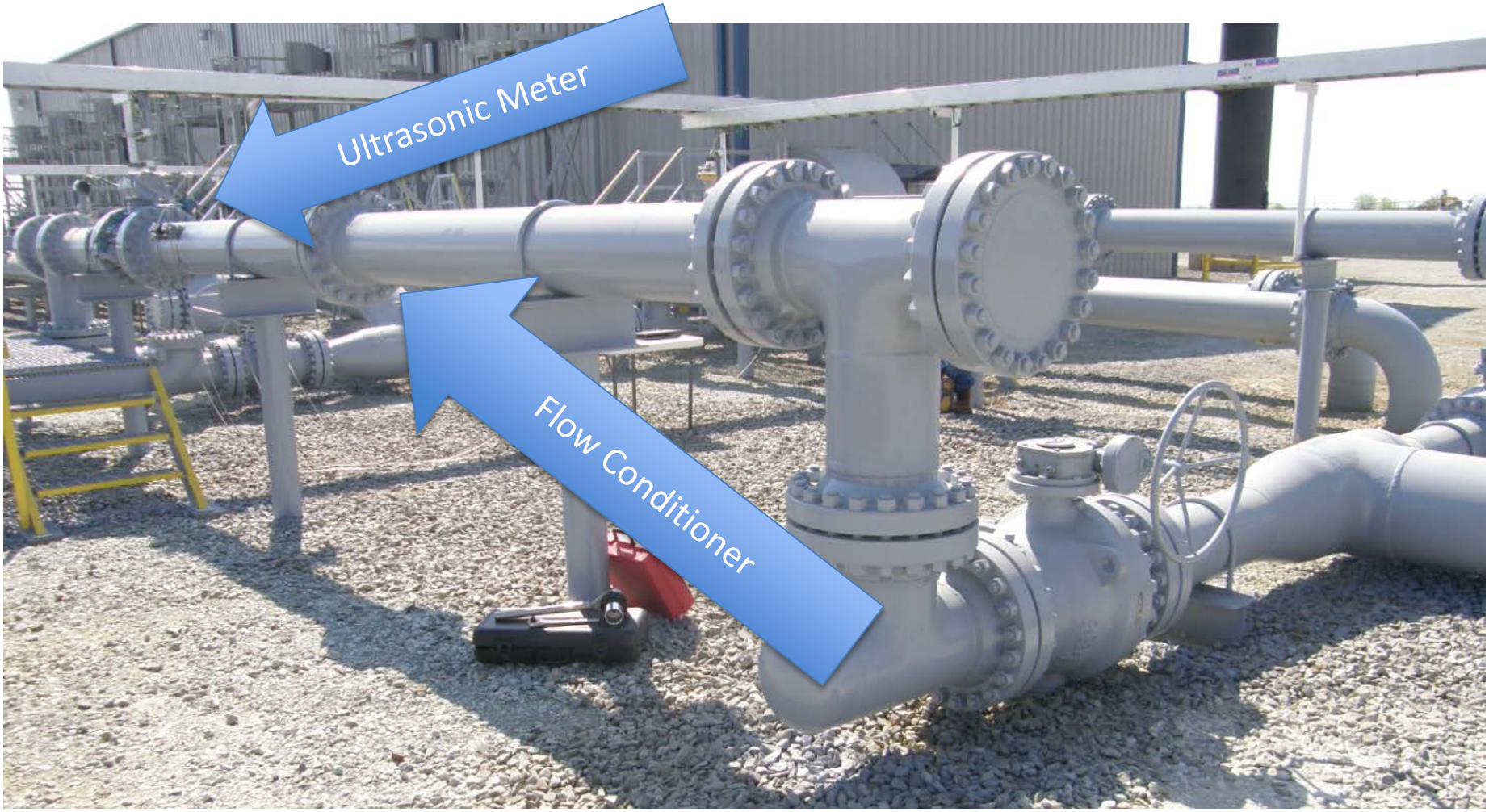

Why should we use a Flow Conditioner?

When dealing with flow measurement, we cannot simply stick a flow meter in the pipe, turn it on and expect perfect results.

In the real world, we have to deal with:

- Installation effects
- Swirl
- Flow profile distortion
- Pulsation
- Noise

All of these combine in different ways to generate measurement errors!

Fully Developed Flow

- Fully developed pipeline flow is the ideal state of a fluid in a pipe.
- If we had an infinitely long pipe, this is the flow we would always see.
- It is mathematically predictable.
- It is perfectly symmetrical around the center of the pipe.
- It has no swirl.
- This *should* guarantee us perfect, error free, repeatable measurement.
- Installation effects take us away from this state.

Fully Developed Flow

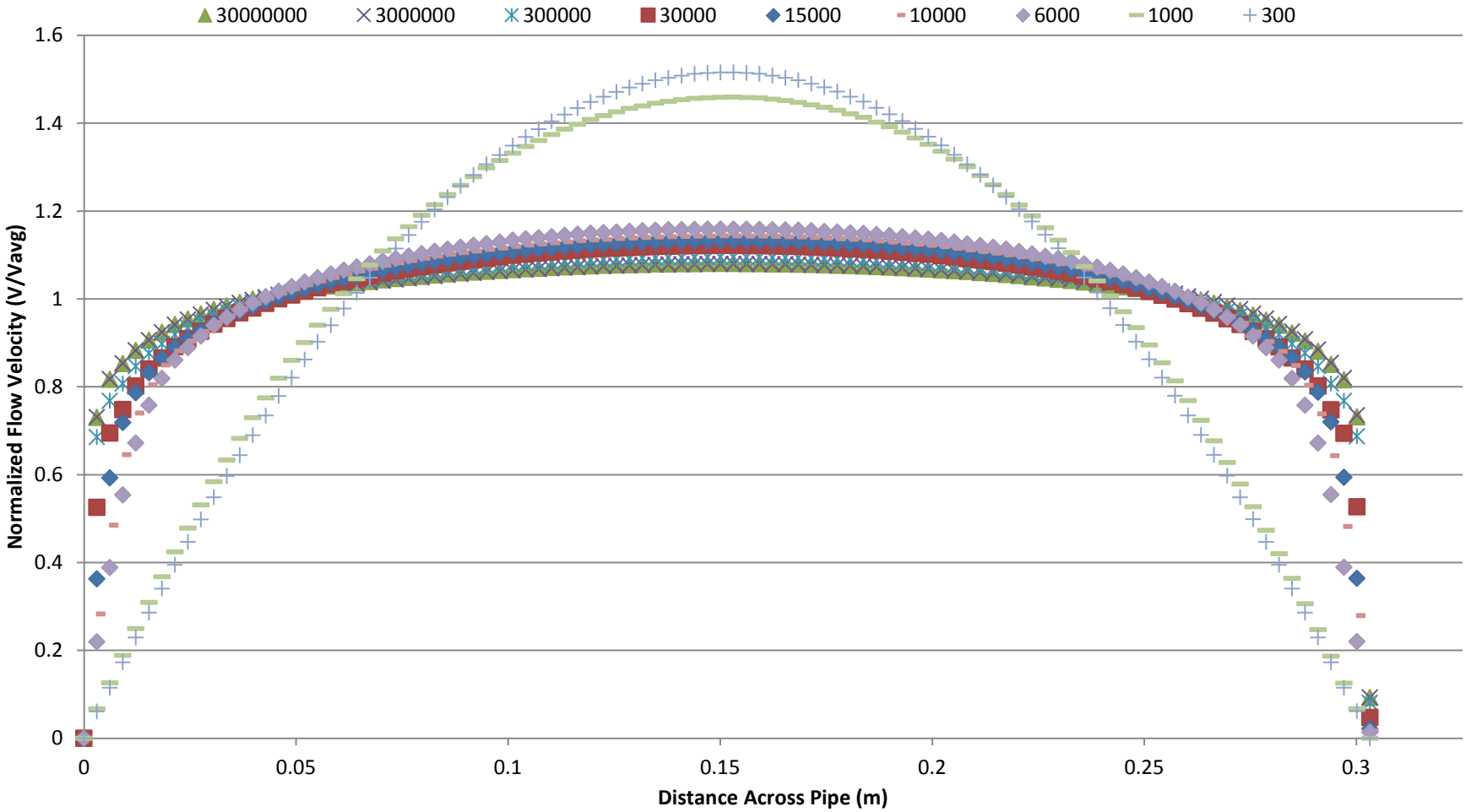

Fully Developed Flow

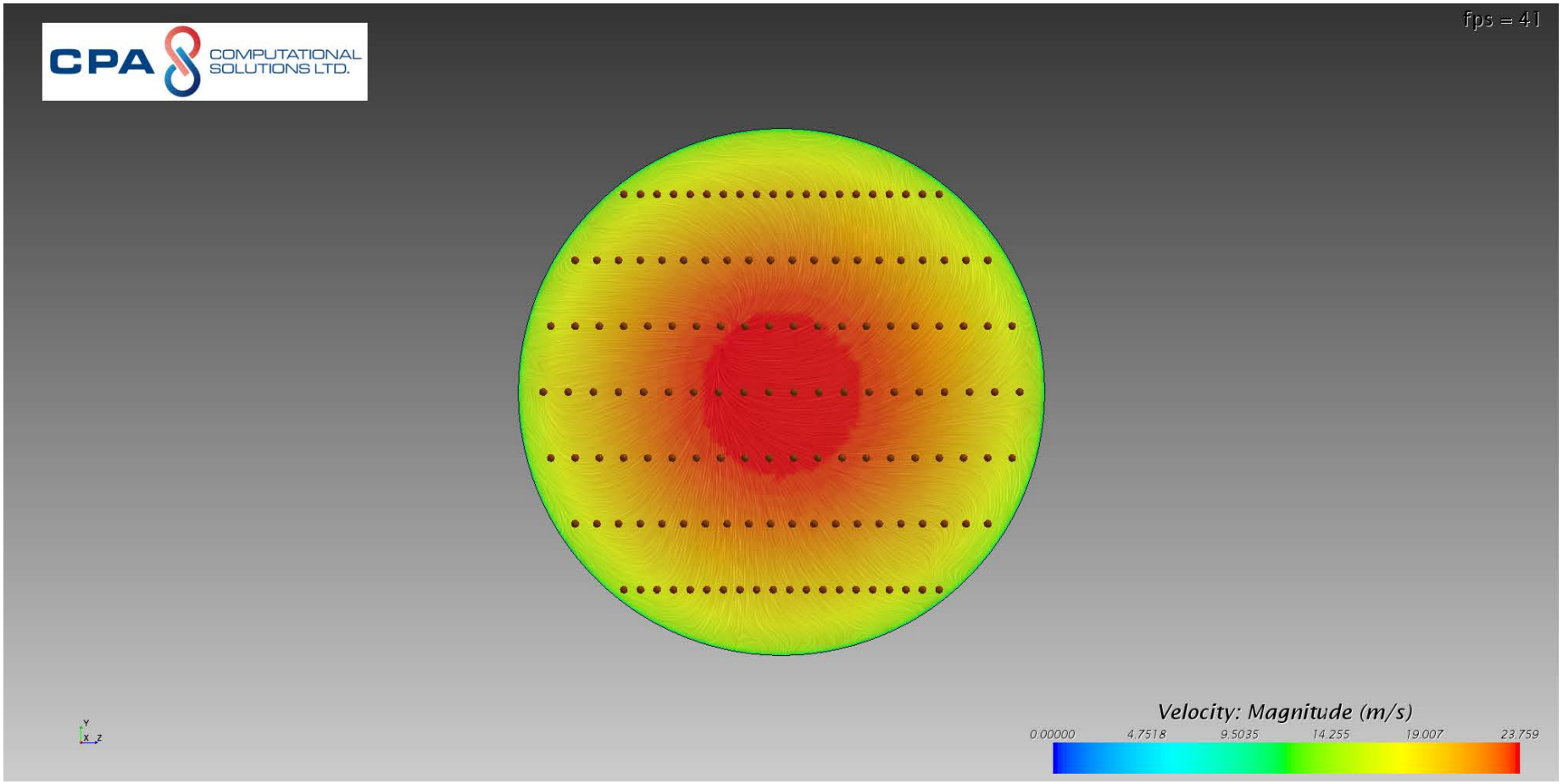

Swirl

- Swirl is the rotation of fluid in a pipe.
- It is caused by any change in piping direction!
- It can also be caused by any partial restriction of a pipe.

Swirl

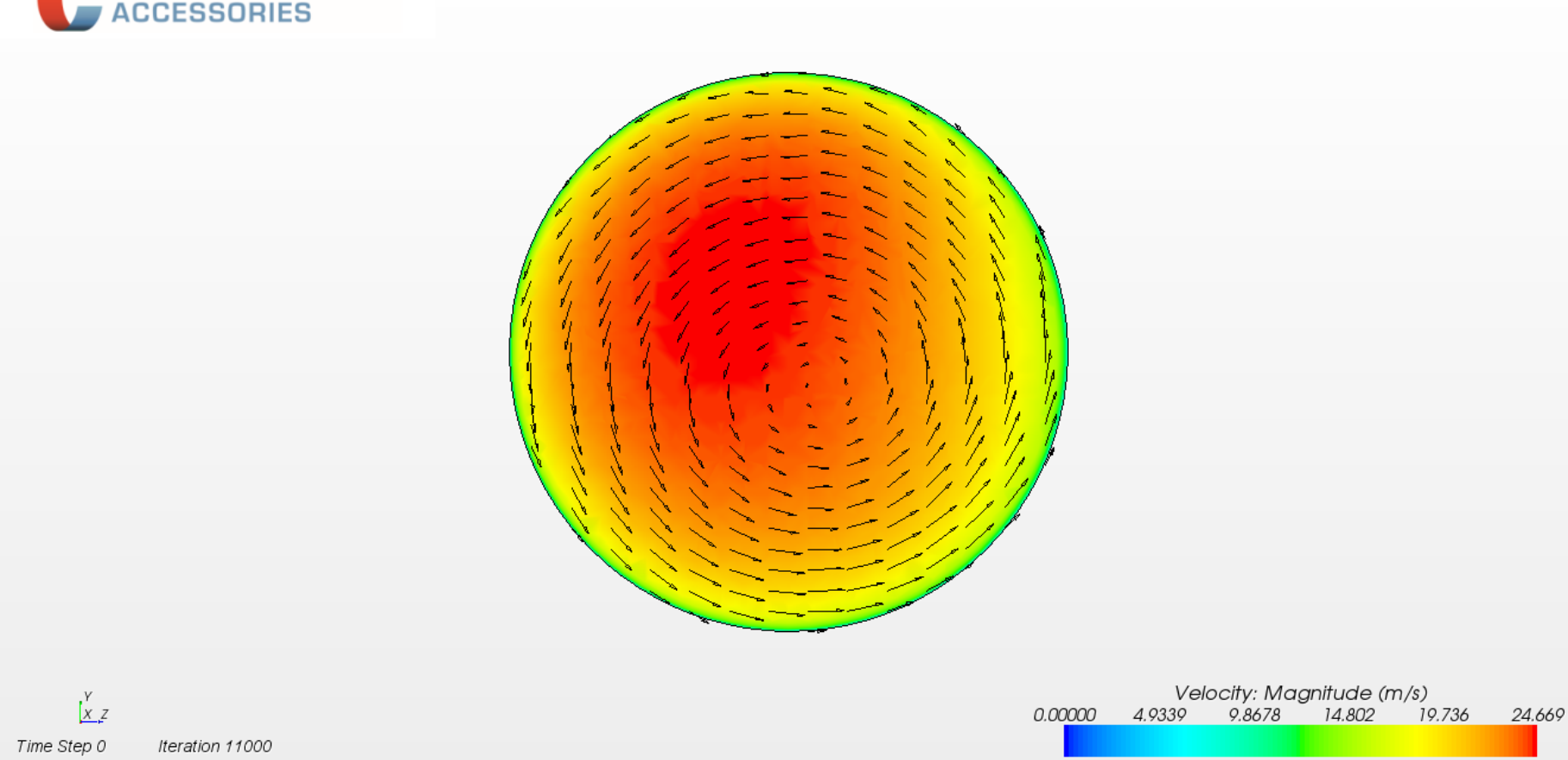
Velocity: Magnitude (m/s)
0.00000
4.9339
9.8678
14.802
19.736
24.669
Time Step 0
Iteration 11000

Swirl

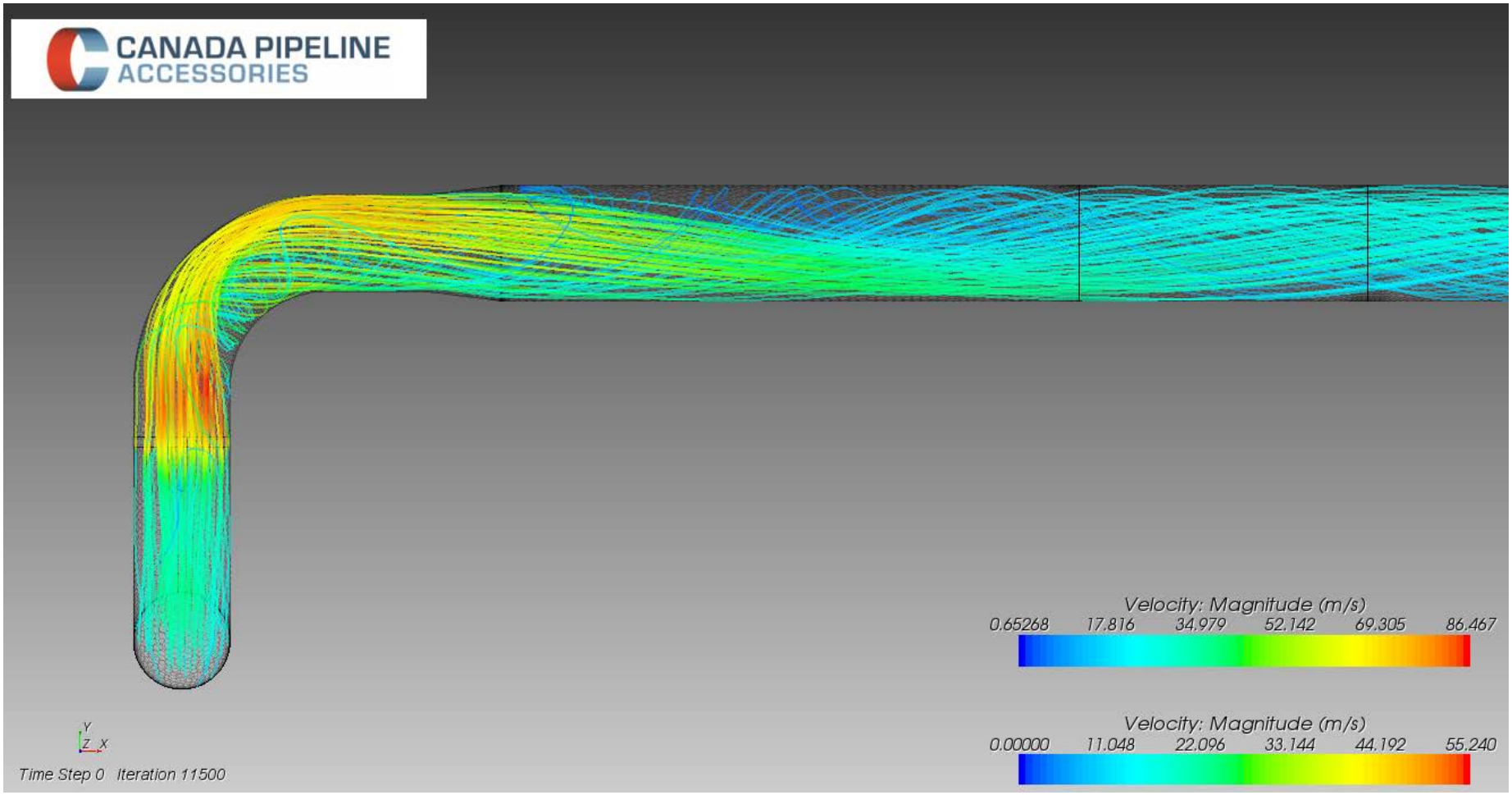
CANADA PIPELINE
ACCESSORIES
Velocity: Magnitude (m/s)
0.65268 17.816 34.979 52.142 69.305 86.467
Velocity: Magnitude (m/s)
0.00000 11.048 22.096 33.144 44.192 55.240
Y
Z X
Time Step 0 Iteration 11500

Swirl

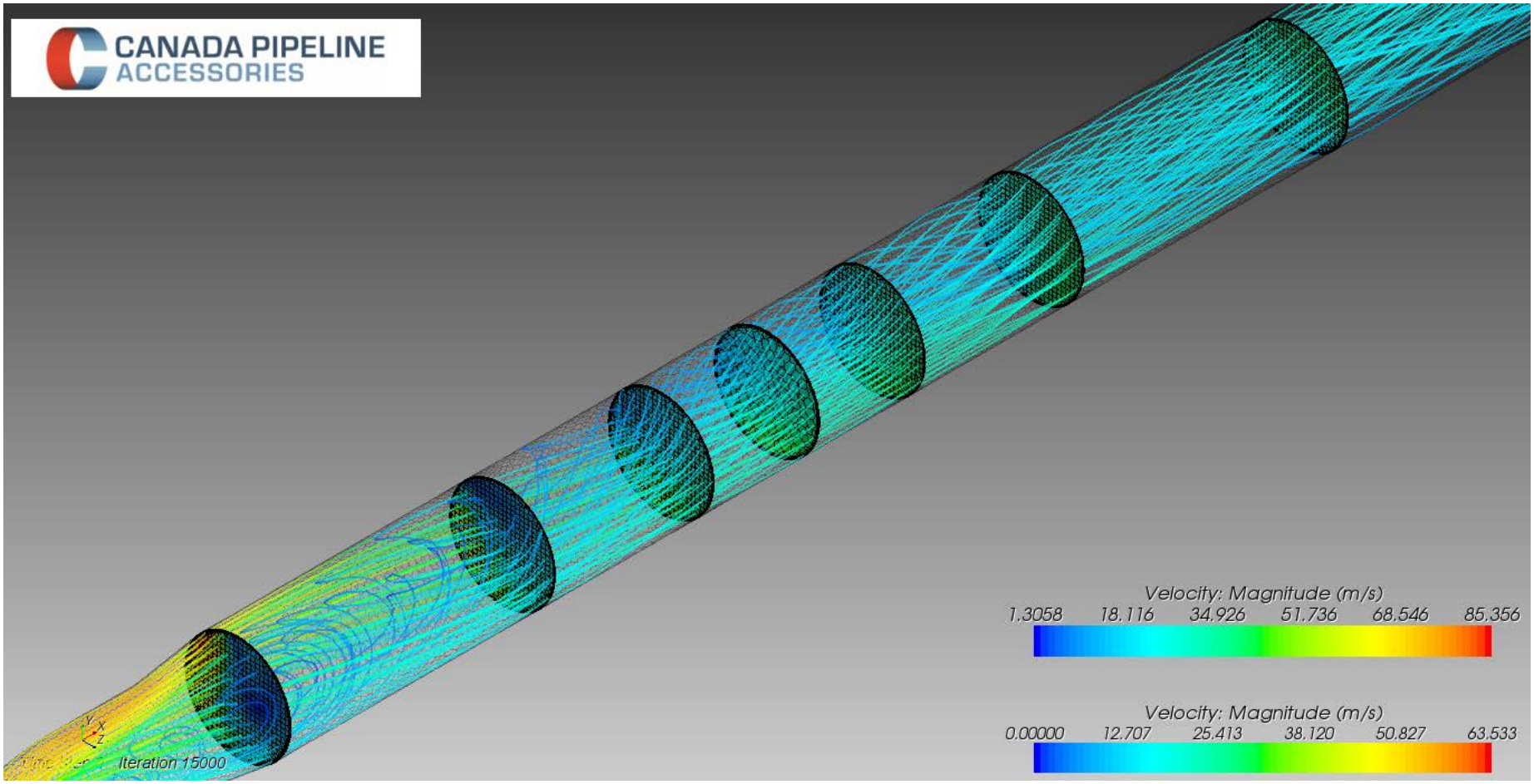
CANADA PIPELINE
ACCESSORIES
Velocity: Magnitude (m/s)
1.3058 18.116 34.926 51.736 68.546 85.356
Velocity: Magnitude (m/s)
0.00000 12.707 25.413 38.120 50.827 63.533
Iteration 15000

Swirl

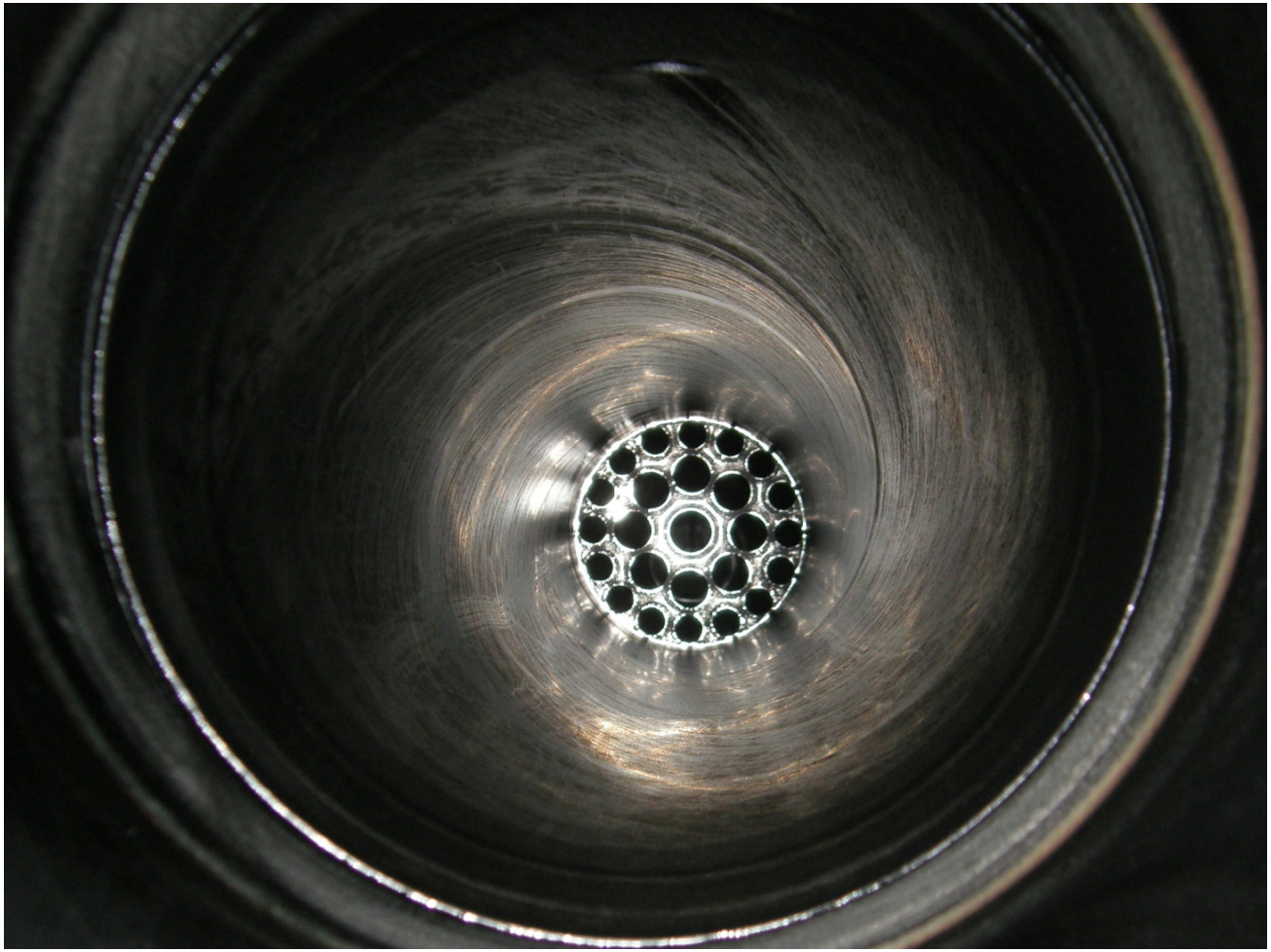

Swirl

- Swirl causes unpredictable distortions in the flow profile that change over time.
- Swirl flattens and then inverts flow profiles due to centripetal force. The harder the fluid is spinning, the more energy that is pushed to the pipe walls.
- Swirl can cause local effects due to the location of pressure taps (dP measurement) or in the case of Ultrasonic Meters (adding to or subtracting to local path velocity).

Installation Effects

Every pipe fitting generates an installation effect.

- Tees
- Elbows
- Expanders
- Reducers
- Valves
- Probes

All of these objects can combine to create a deviation from perfect fully developed flow.

Installation Effects - Elbows

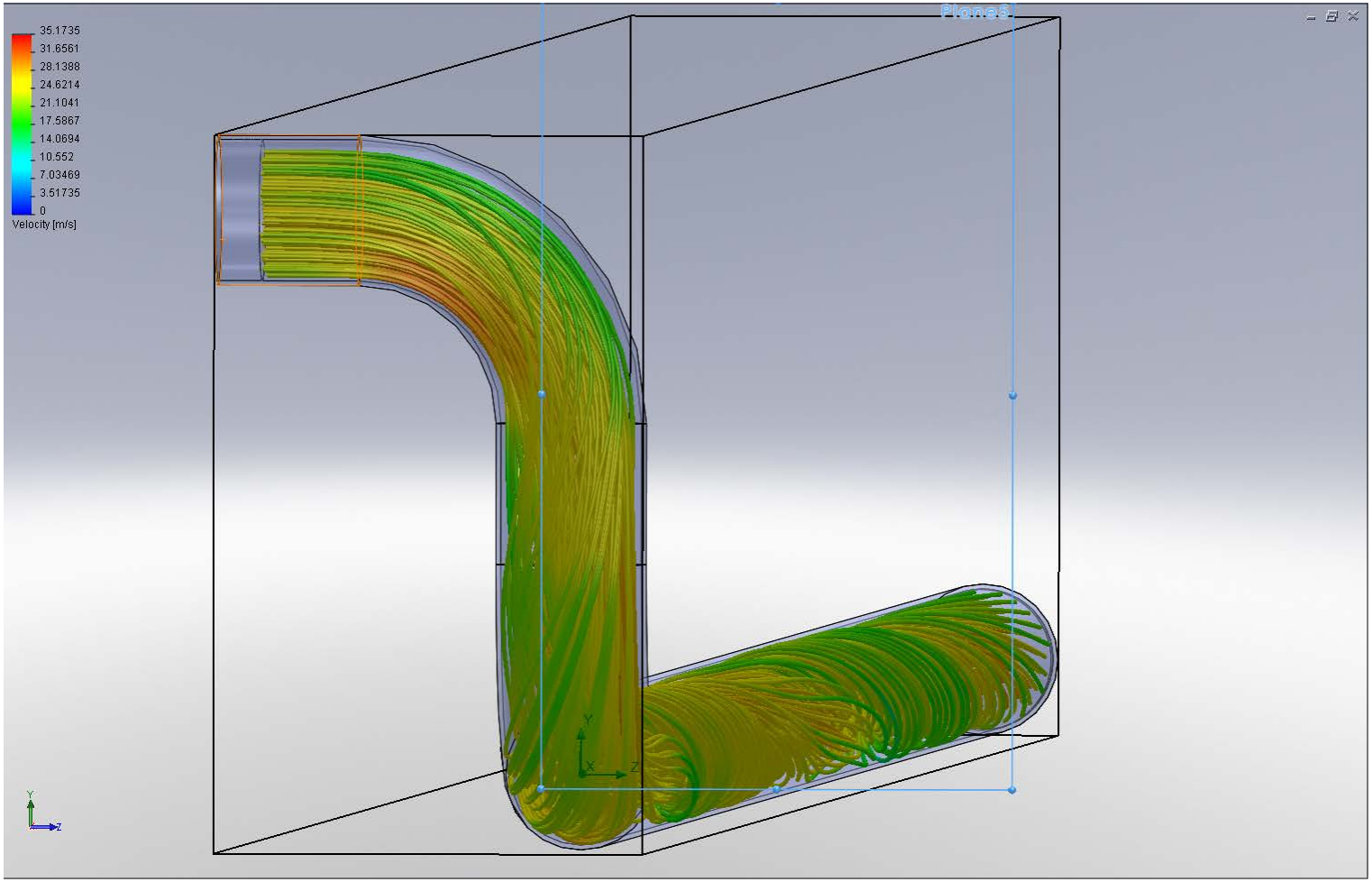

Installation Effects - Tees

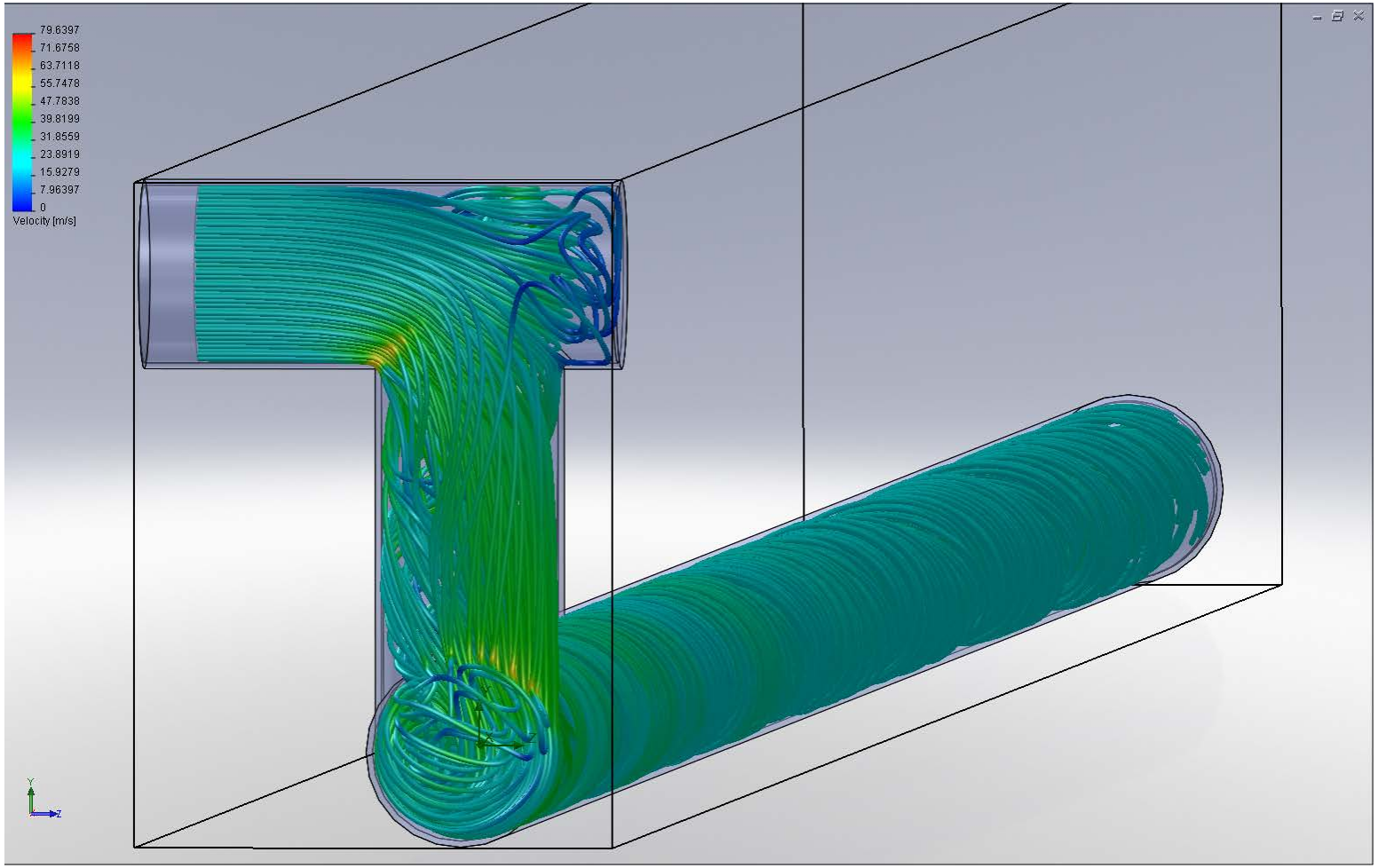

Installation Effects – Tees

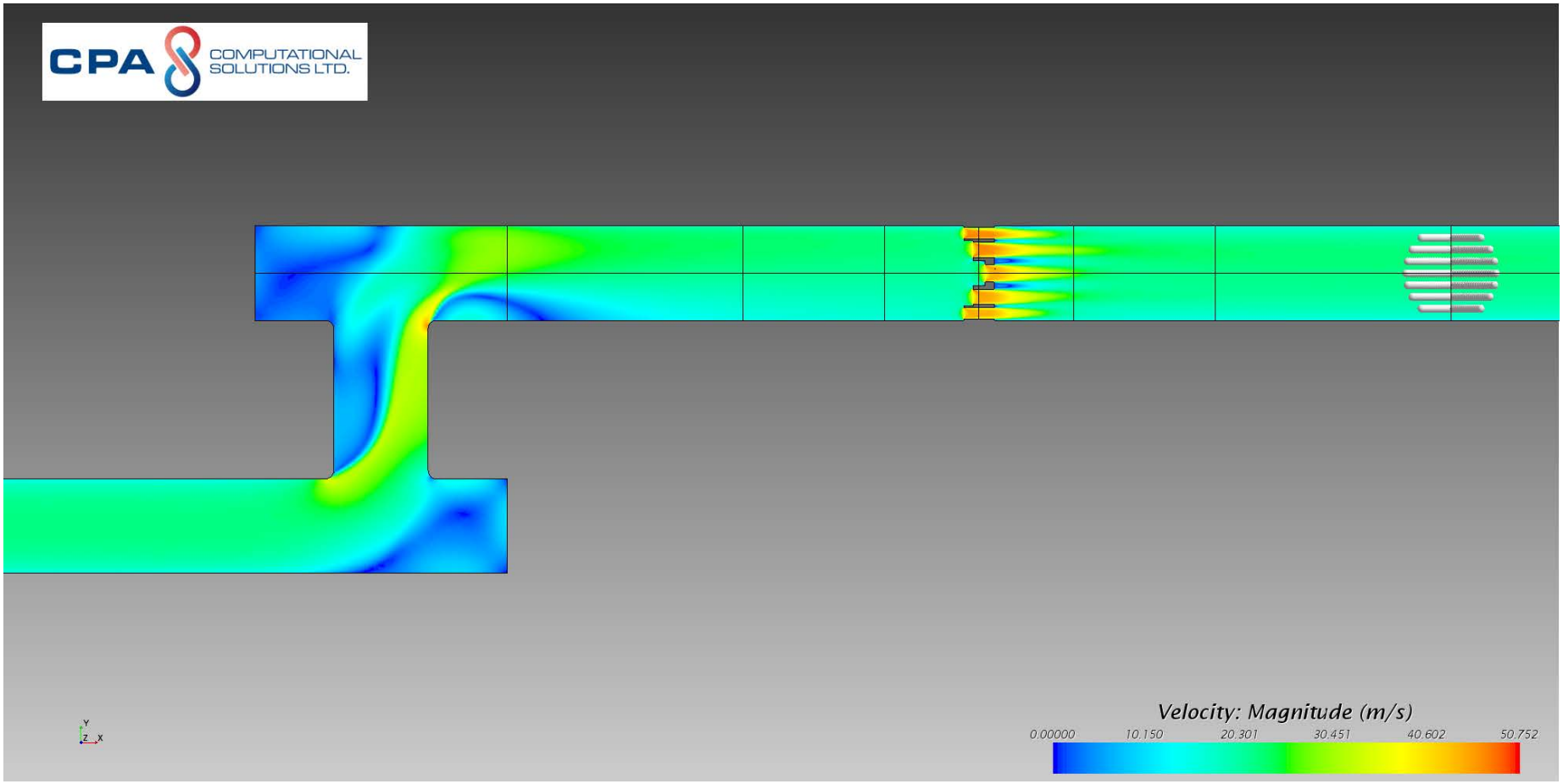

Installation Effects – Tees /w Turbulence

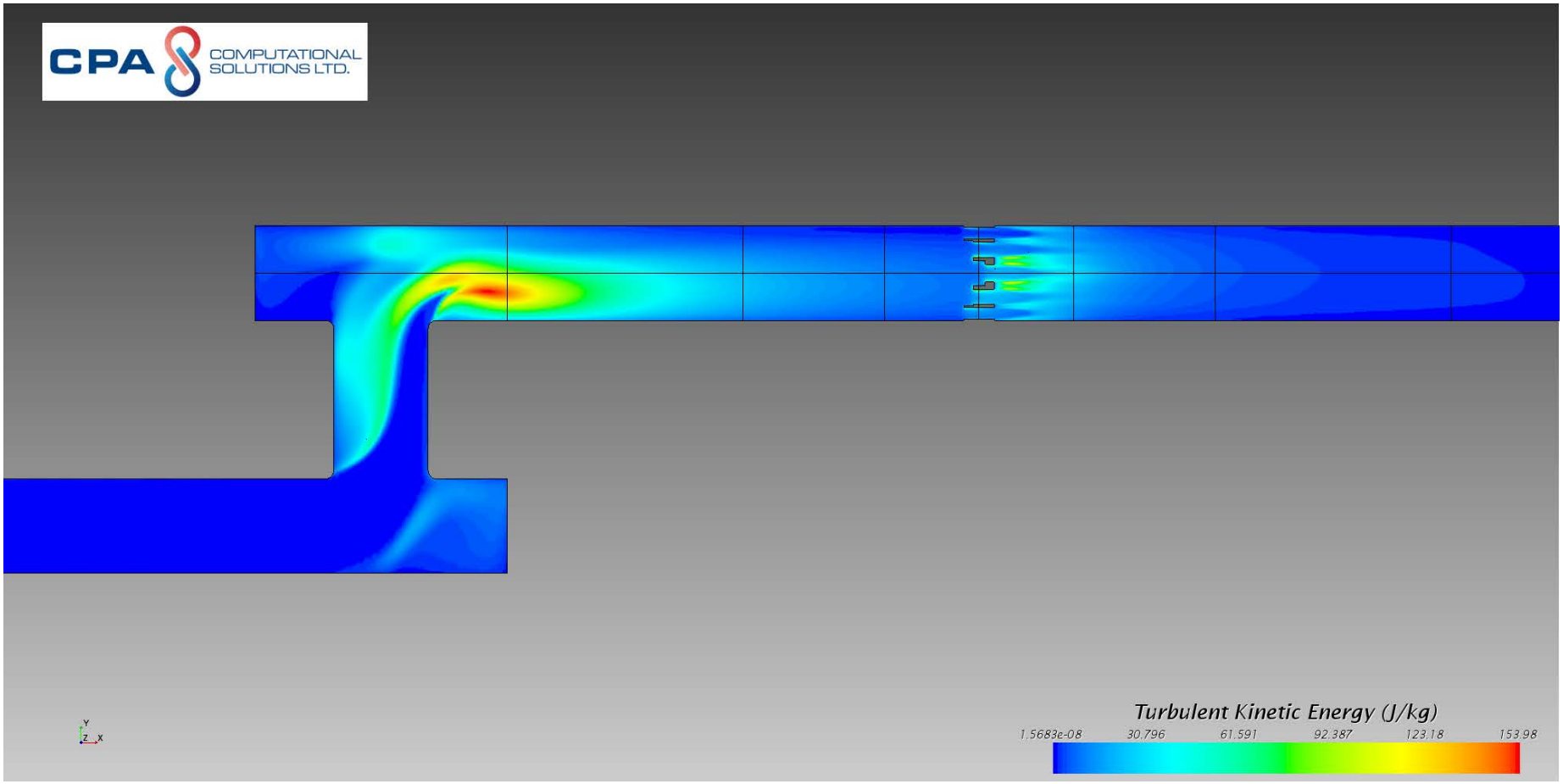

Installation Effects - Probes

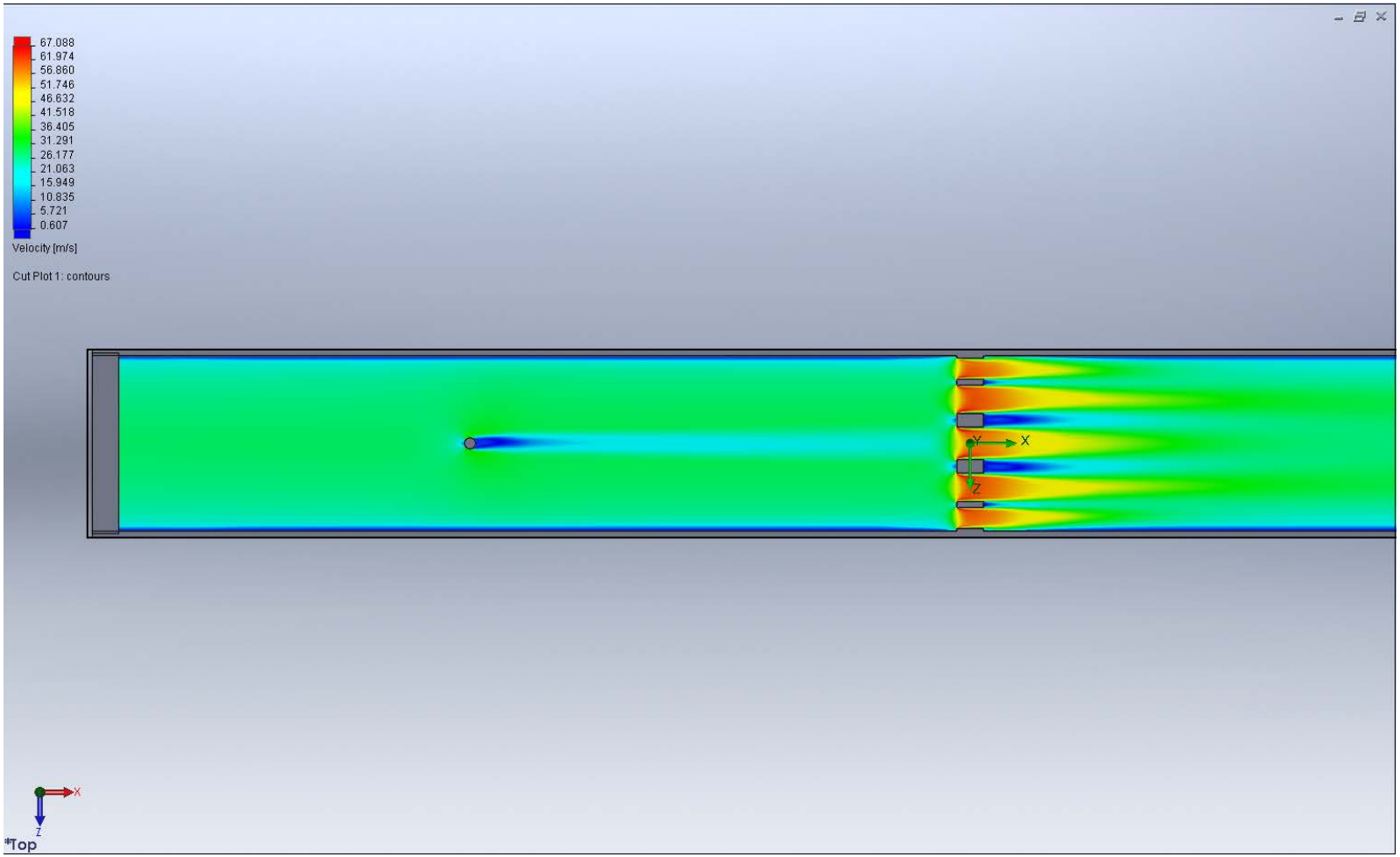

Installation Effects – Valves

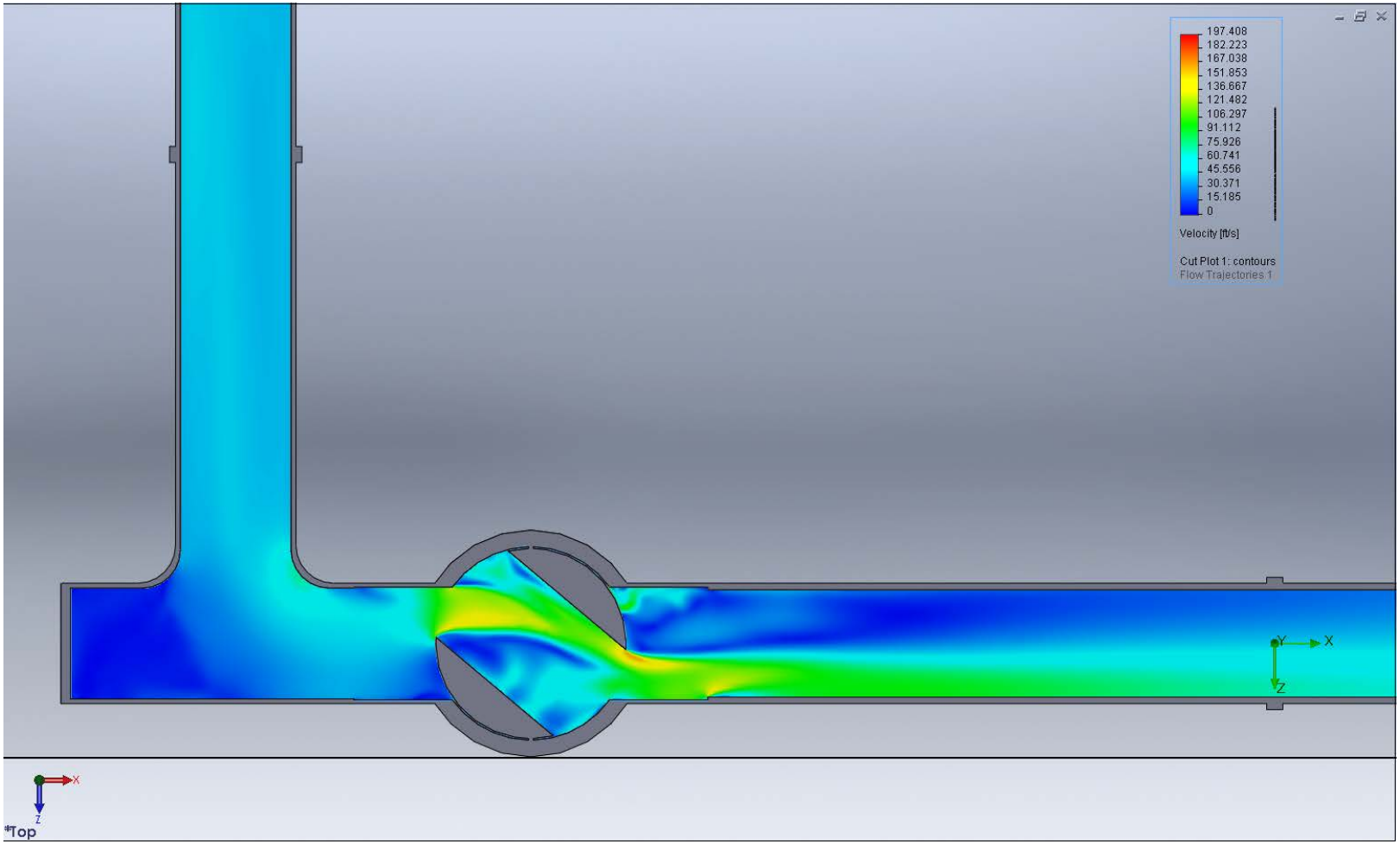

Installation Effects – Elbows & Orifice Plates

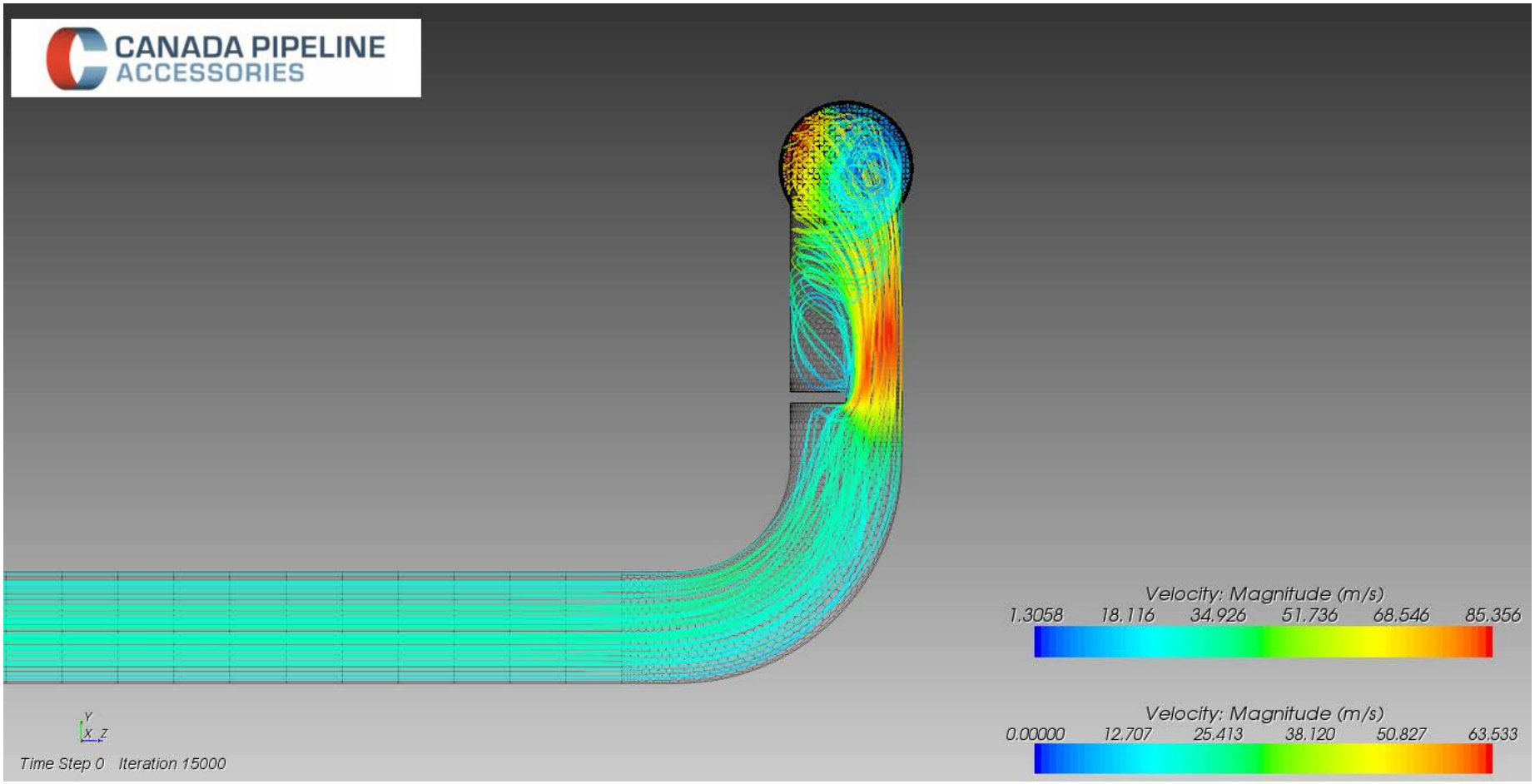

Installation Effects – Reducers

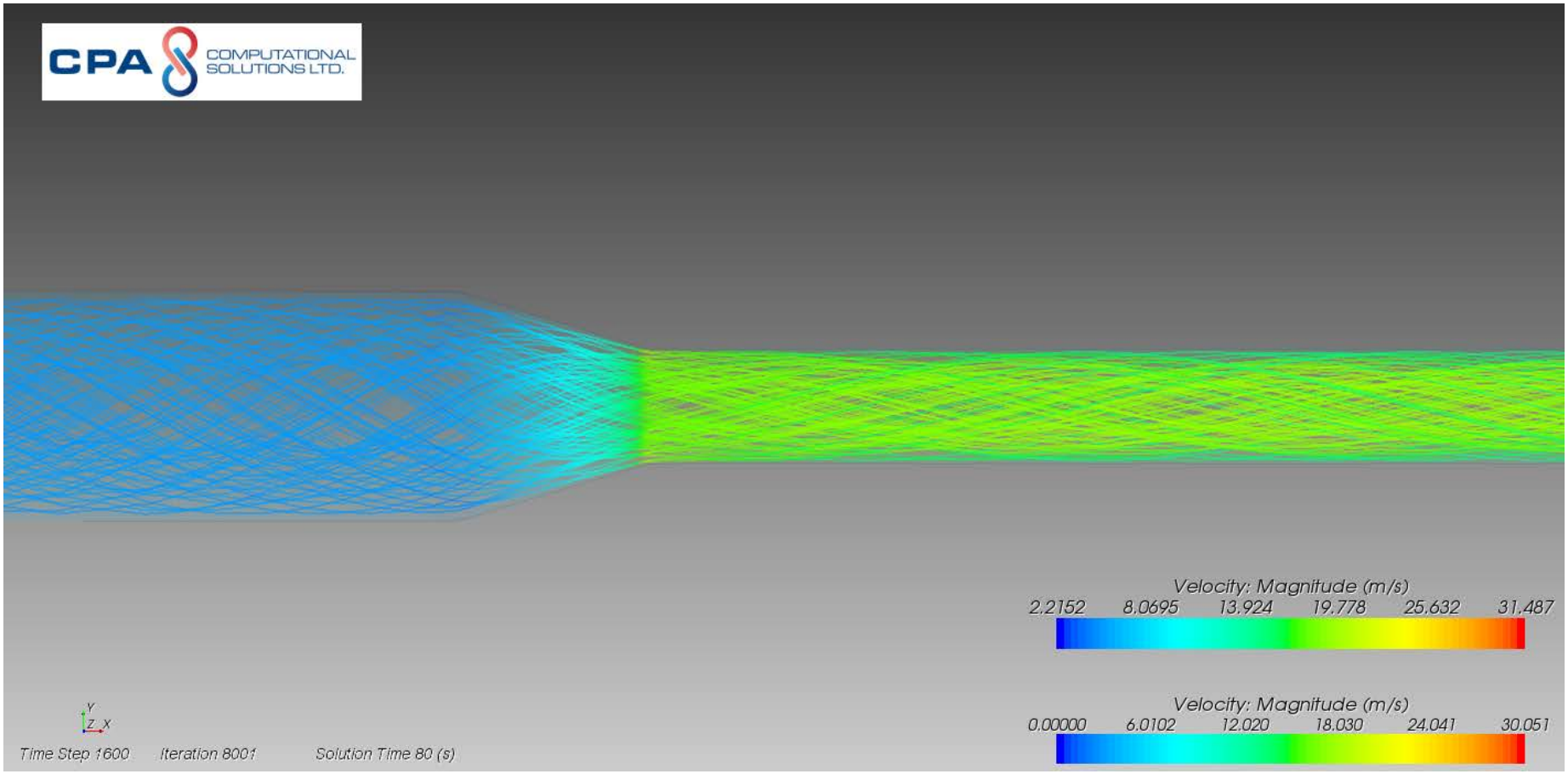

Measurement Errors

- The further we get from our perfect, swirl free, fully developed flow, the more uncertain our measurement becomes.
- Error due to flow profile distortion – deviation from baseline state.
- Error due to swirl itself.
- What if we want to shorten our meter run?
- What do we do?

Without Flow Conditioning

- We can build a meter run without any sort of flow conditioning!
- It just needs to be very long to compensate for installation effects and swirl.
- AGA3-2000 even allows this.
- Table 2-7 shows suggested meter run lengths when a flow conditioner won't be used…but the runs could end up being 44D, 95D or even up to 145D long!!

Flow Conditioning

A properly designed Flow Conditioner converts this flow....

...Into this.

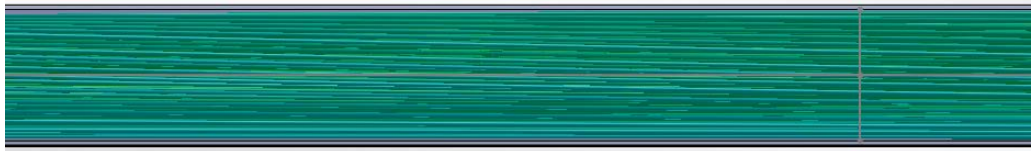

Flow Conditioning

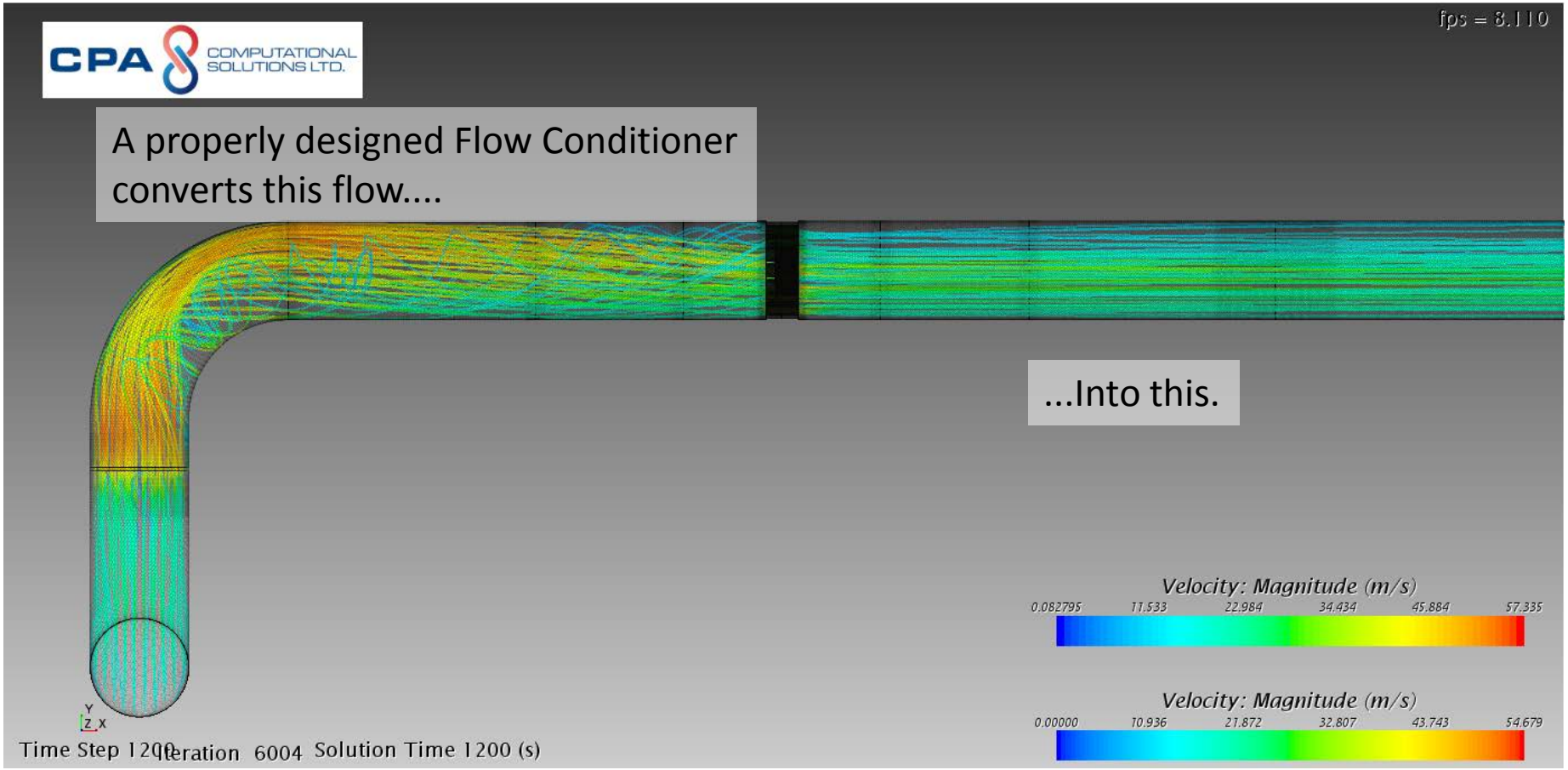

Flow Conditioning

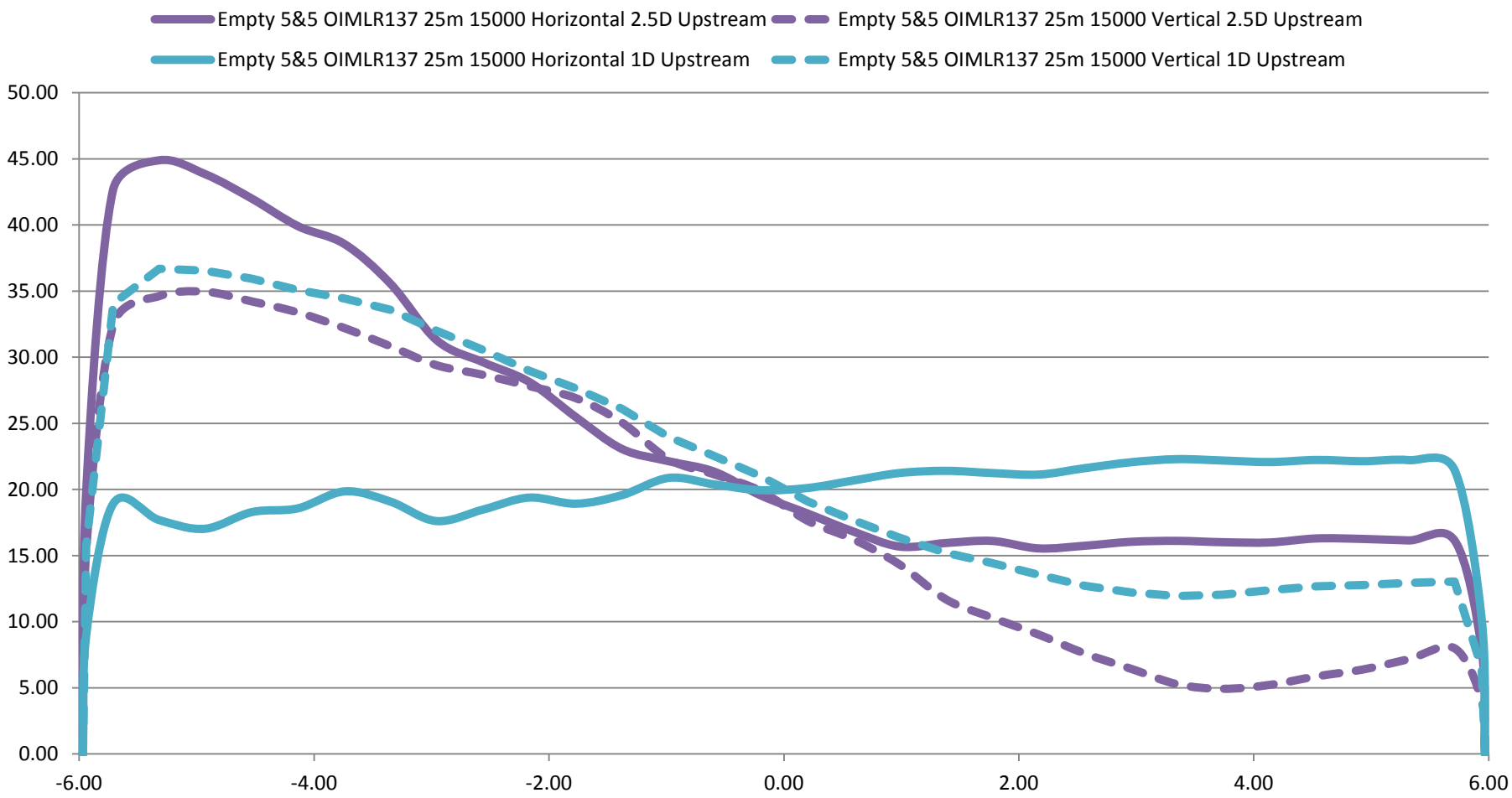

Flow Conditioning

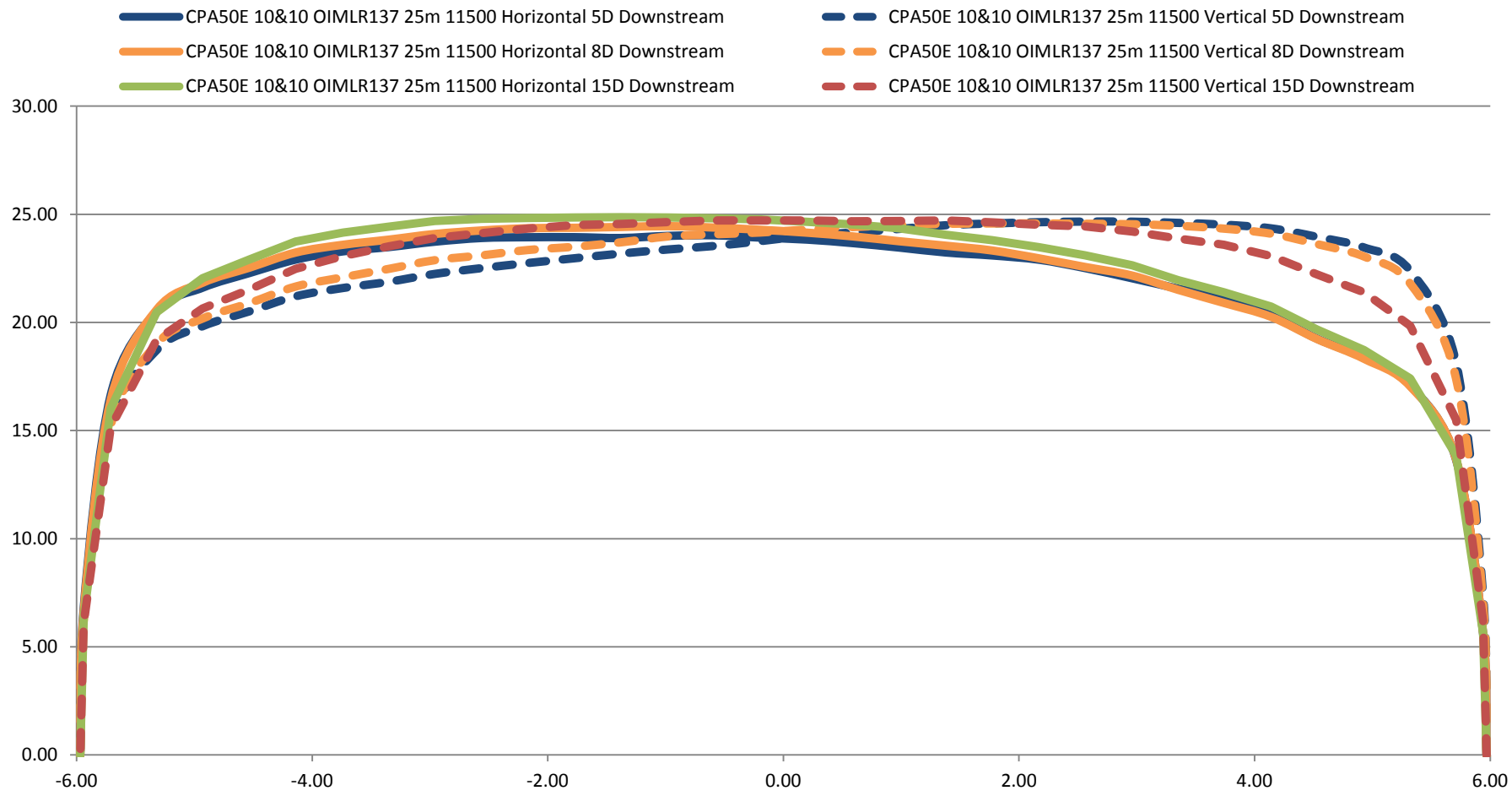

Elbows – Swirl Removal

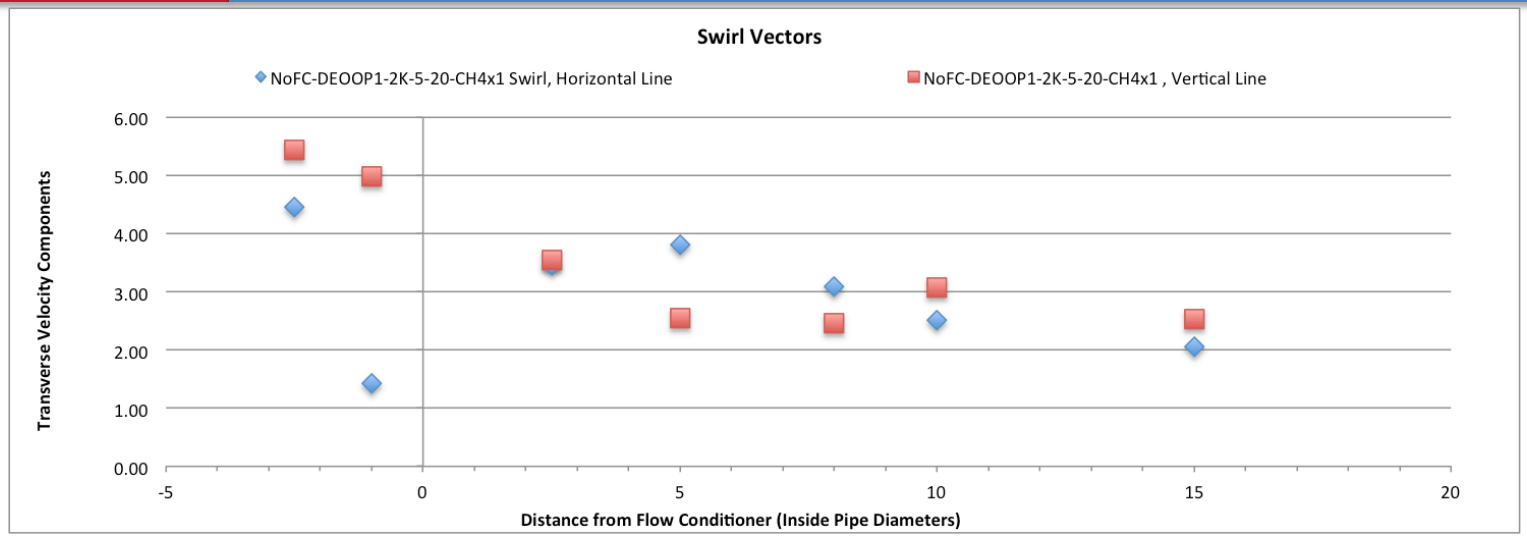

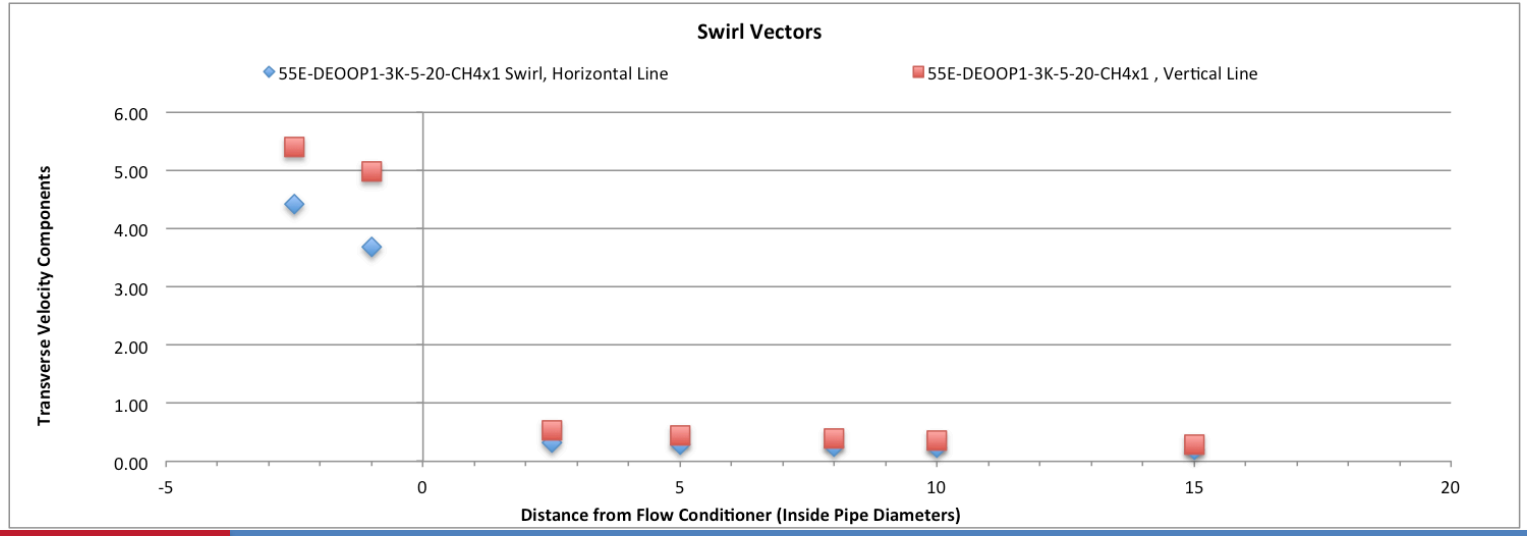

Tees – Swirl Removal

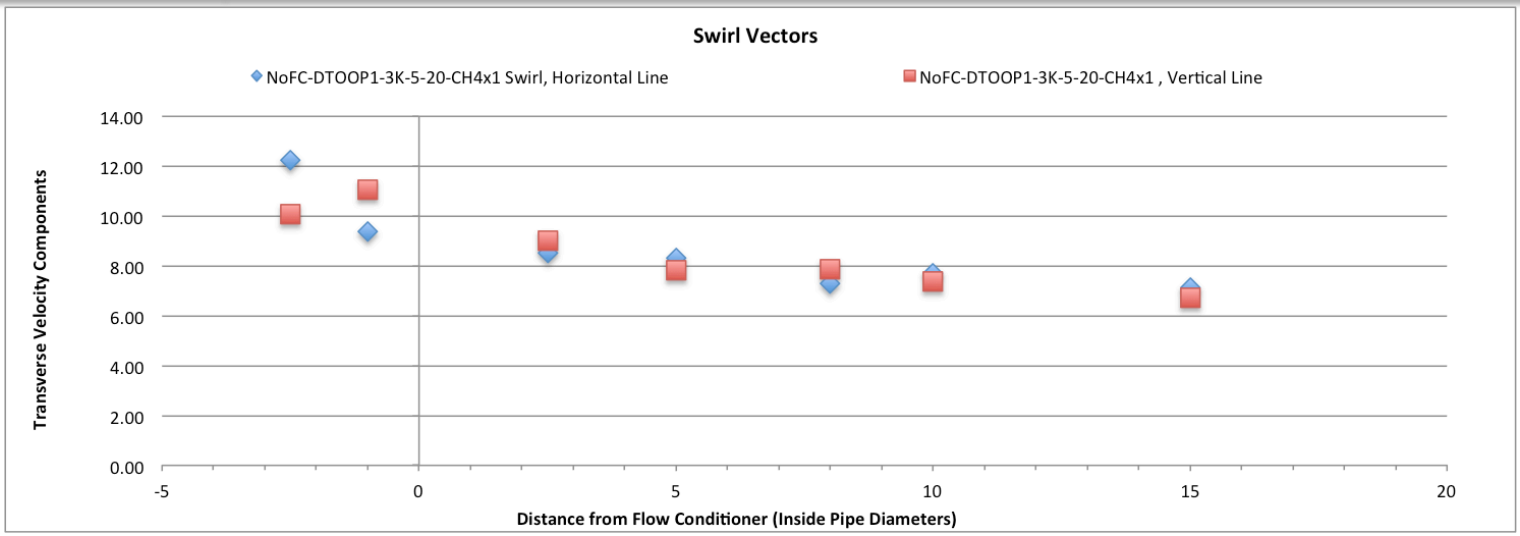

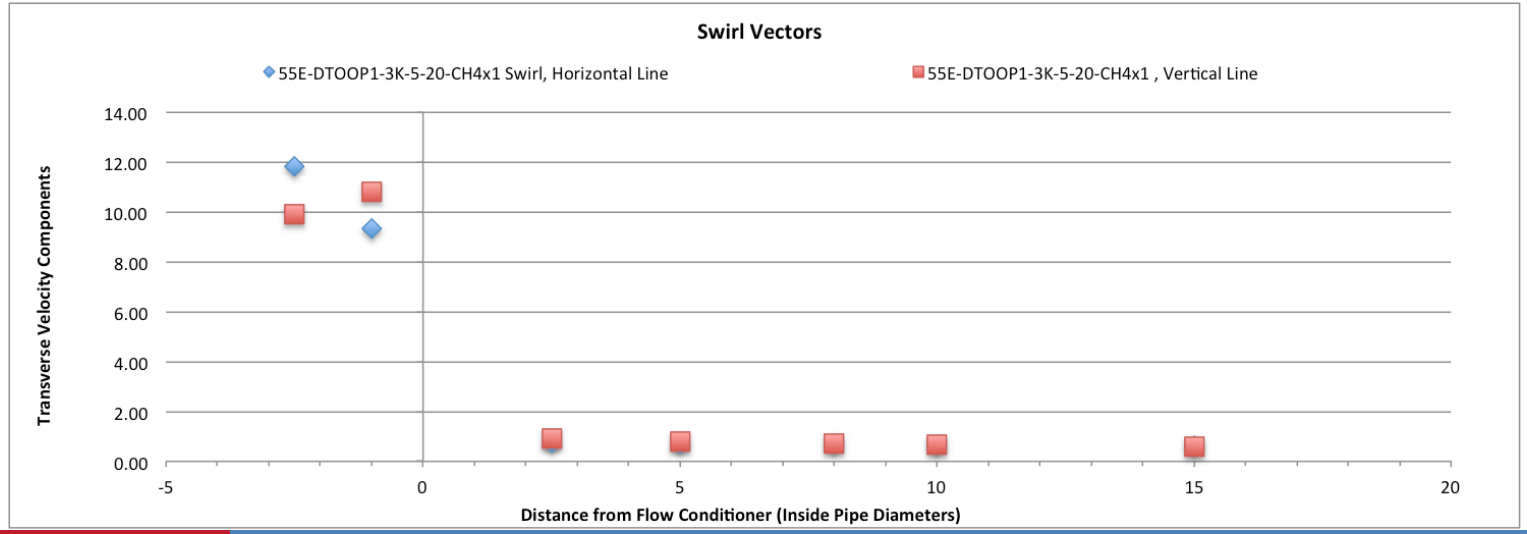

Swirl – ALL SCENARIOS

	Swirl Angle (Degrees)				
	4D Downstream	10D Downstream	13D Downstream	15D Downstream	20D Downstream
No FC, Single Elbow, 5 & 5	7.269	3.188	2.452	2.159	0.905
CPA 55E, Single Elbow, 5 & 5	7.185	0.475	0.342	0.301	0.209
NoFC, Single 45, 5 & 5	6.725	3.057	2.317	2.007	1.226
55E, Single 45, 5 & 5	6.190	0.419	0.289	0.243	0.150
No FC, Dual Elbows In Plane 1D, 5 & 5	9.860	9.421	7.415	6.488	4.322
CPA 55E, Dual Elbows In Plane 1D, 5 & 5	8.892	1.008	0.878	0.794	0.556
No FC, Dual Elbows In Plane 5D, 5 & 5	6.875	5.250	4.845	4.529	3.357
CPA 55E, Dual Elbows In Plane 5D, 5 & 5	6.596	0.517	0.476	0.449	0.355
No FC, Dual 45'S In Plane 1D, 5 & 5	3.673	2.141	1.765	1.586	1.121
CPA 55E, Dual 45'S In Plane 1D, 5 & 5	3.560	0.286	0.253	0.228	0.188
No FC, Dual Elbows Out Of Plane 1D, 5 & 5	11.335	9.442	7.456	6.358	4.493
CPA 55E, Dual Elbows Out Of Plane 1D, 5 & 5	11.311	1.114	0.965	0.901	0.735
No FC, Dual Elbows Out Of Plane 5D, 5 & 5	5.116	1.666	1.109	0.924	0.534
CPA 55E, Dual Elbows Out Of Plane 5D, 5 & 5	5.050	0.298	0.200	0.174	0.123
No FC, Dual Tees In Plane 1D, 5 & 5	3.648	1.454	1.146	0.978	0.628
55E, Dual Tees In Plane 1D, 5 & 5	3.510	0.217	0.179	0.184	0.130
No FC, Dual Tees Out Of Plane 1D, 5 & 5	22.961	22.375	18.841	17.174	19.463
55E, Dual Tees Out Of Plane 1D, 5 & 5	22.846	1.700	1.546	1.490	1.358
No FC, Dual Tees Out Of Plane 5D, 5 & 5	4.162	4.252	4.267	4.188	3.607
55E, Dual Tees Out Of Plane 5D, 5 & 5	5.096	0.416	0.402	0.384	0.301

Flow Conditioner Swirl Reduction

	Swirl Reduction due to CPA 55E (%)		
	10D Downstream	13D Downstream	15D Downstream
CPA 55E, Single Elbow, 5 & 5	-85.08%	-86.05%	-86.06%
55E, Single 45, 5 & 5	-86.31%	-87.53%	-87.90%
CPA 55E, Dual Elbows In Plane 1D, 5 & 5	-89.30%	-88.16%	-87.76%
CPA 55E, Dual Elbows In Plane 5D, 5 & 5	-90.16%	-90.19%	-90.09%
CPA 55E, Dual 45'S In Plane 1D, 5 & 5	-86.62%	-85.69%	-85.63%
CPA 55E, Dual Elbows Out Of Plane 1D, 5 & 5	-88.20%	-87.05%	-85.82%
CPA 55E, Dual Elbows Out Of Plane 5D, 5 & 5	-82.10%	-81.94%	-81.15%
55E, Dual Tees In Plane 1D, 5 & 5	-85.08%	-84.35%	-81.18%
55E, Dual Tees Out Of Plane 1D, 5 & 5	-92.40%	-91.80%	-91.32%
55E, Dual Tees Out Of Plane 5D, 5 & 5	-90.21%	-90.59%	-90.83%

Meter Types

- All volumetric flow meters can be flow conditioned: **Orifice**, **Ultrasonic**, Venturi, Coriolis Vortex, Turbine, Cone, Mag, etc.
- Every meter type responds differently to the effects of swirl and flow profile distortion.
- Volumetric flow meters are looking for 'good flow'. Flow with minimal swirl and good flow profiles.
- A flow conditioner is simply trying to improve the flow that the meter is seeing.

CPA once said….

- It’s far easier to measure good flow with a bad meter, than trying to measure bad flow with a good meter.

Orifice Meters

- A thin plate with a very sharp chamfered hole creates a significant pressure drop.
- The flow rate of the fluid is proportional to the pressure drop.
- So why is there a problem?

Orifice Meters

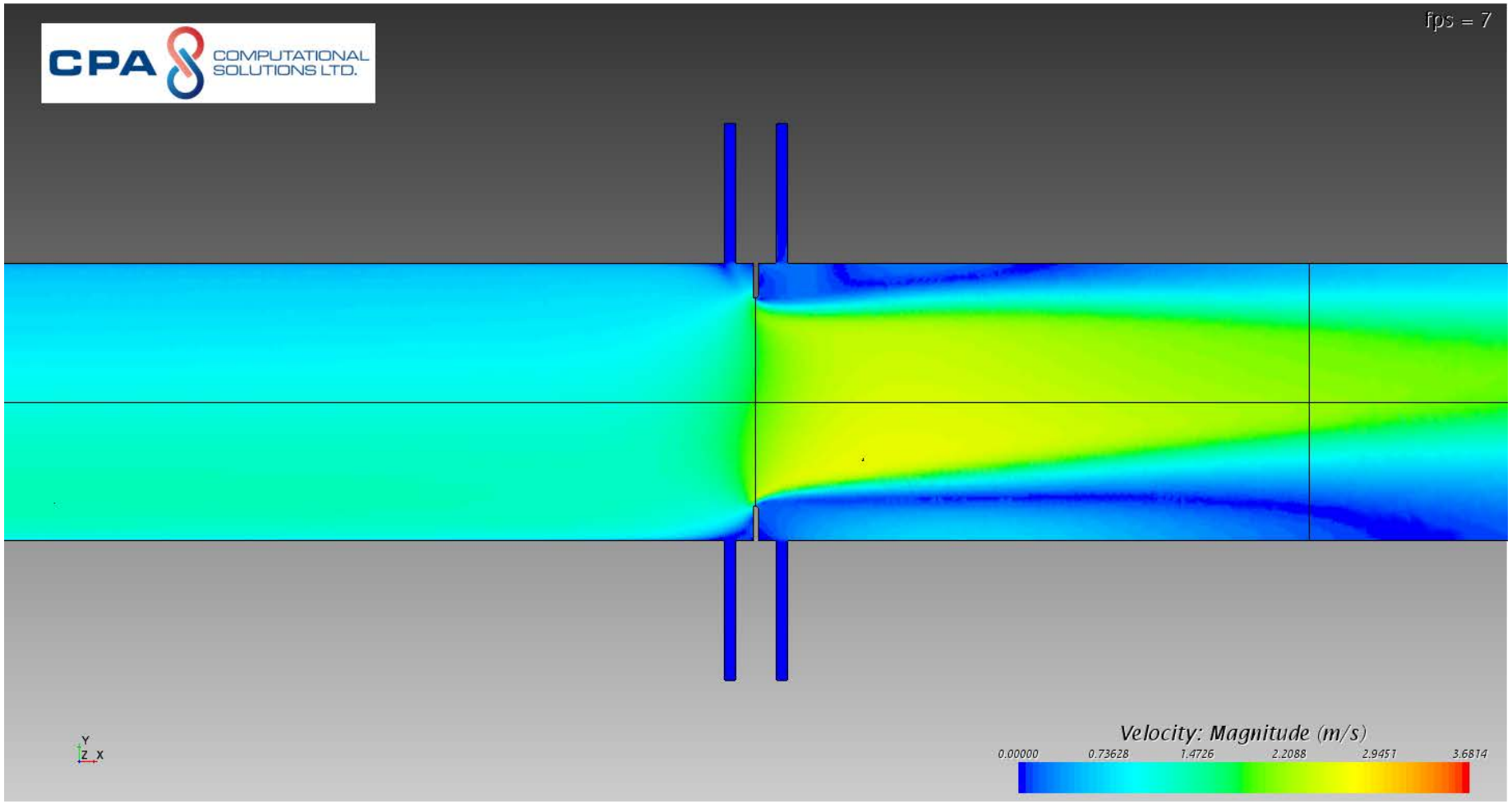

Orifice Meters with Swirl

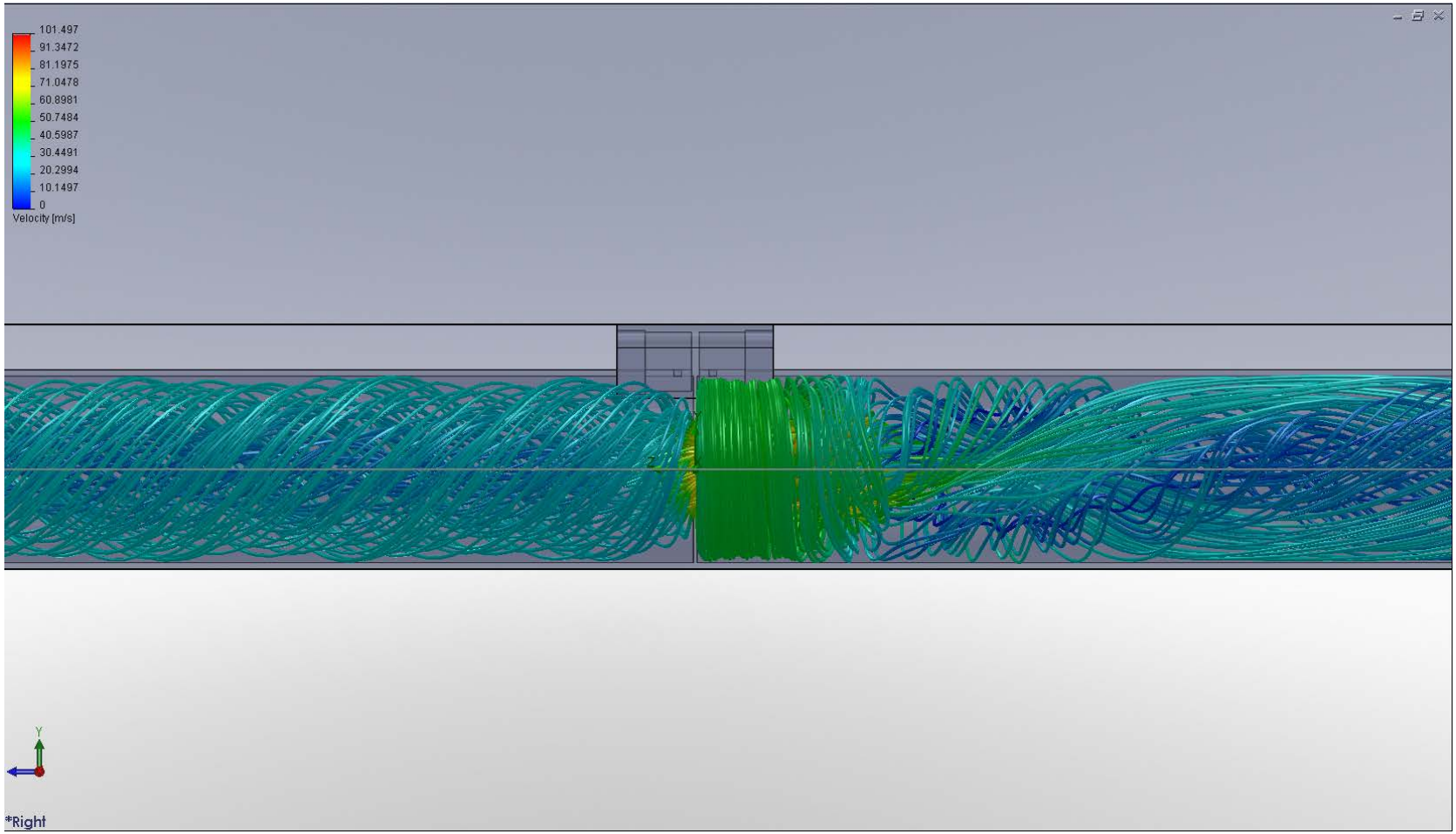

Orifice Meters

- In orifice measurement, swirl can change the pressure differential that is being measured.

Velocity (fps)	Velocity (m/s)	Swirl (Degrees)	P1 (Pa)	P2 (Pa)	Bulk Density (ρ)	K	deltaP (Pa)
50	15.24	0	5598181	5458170	36.84	32.73	140011
50	15.24	20	5591067	5471339	36.74	28.06	119728
50	15.24	45	5560318	5497955	36.68	14.64	62363

Without Flow Conditioning

Table 2-7—Orifice Meter Installation Requirements Without a Flow Conditioner

Diameter ratio β	Minimum Straight Unobstructed Meter Tube Length from the Upstream Side of the Orifice Plate (in multiples of published internal pipe diameter, D_i)										
	a. Single 90° elbow. b. Two 90° elbows in the same plane with $S > 30D_i$. c. Two 90° elbows in perpendicular planes with $S > 15D_i$.	Two 90° elbows in the same plane "S" configuration spacer $S \leq 10D_i$	Two 90° elbows in the same plane, "S" configuration $10D_i < S \leq 30D_i$	Two 90° elbows in perpendicular planes, $S < 5D_i$*	Two 90° elbows in perpendicular planes, $5D_i \leq S \leq 15D_i$	Single 90° Tee used as an elbow but not as a header element	a. Single 45° elbow. b. Two 45° elbows in the same plane "S" configuration $S \geq 22D_i$	Gate valve at least 50% open	Concentric reducer	Any other configuration (catch all category)*	Downstream meter tube length
	UL	UL	UL	UL	UL	UL	UL	UL	UL	UL	DL
≤ 0.20	6	10	10	50	19	9	30	17	6	70	2.8
0.30	11	10	12	50	32	9	30	19	6	108	3.0
0.40	16	10	13	50	44	9	30	21	6	145	3.2
0.50	30	30	18	95	44	19	30	25	7	145	3.5
0.60	44	44	30	95	44	29	30	30	9	145	3.9
0.67	44	44	44	95	44	36	44	35	11	145	4.2
0.75	44	44	44	95	44	44	44	44	13	145	4.5
Recommended length for maximum range β ≤ 0.75	44	44	44	95	44	44	44	44	13	145	4.5

UL = Minimum meter tube length upstream of the orifice plate in internal pipe diameter (D_i)(see Figure 2-6). Straight length shall be measured from the downstream end of the curved portion of the nearest (or only) elbow or of the tee or the downstream end of the conical portion of reducer or expander.
DL = Minimum downstream meter tube length in internal pipe diameters (D_i)(see Figure 2-6).
S = Separation distance between piping elements in internal pipe diameter (D_i) measured from the downstream end of the curved portion of the upstream elbow to the upstream end of the curved portion of the downstream elbow.
* These installations exhibit the strong effect of Reynolds number and pipe roughness on the recommended length due to the rate of swirl decay. The present recommendations have been developed for high Reynolds numbers and smooth pipes to capture the worst case.

Note: The tolerance on specified lengths for UL and DL is ± $0.25D_i$.

Straight Pipe

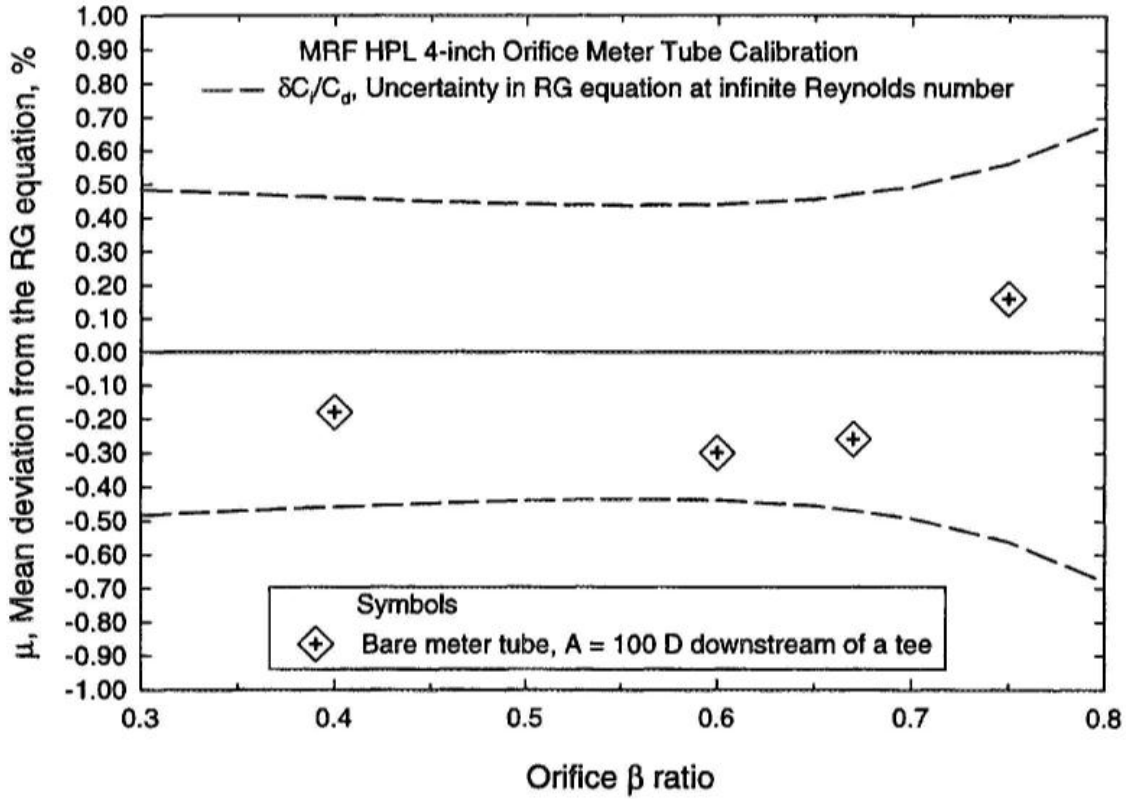

From GRI 97/0207

Straight Pipe – Elbows Out Of Plane

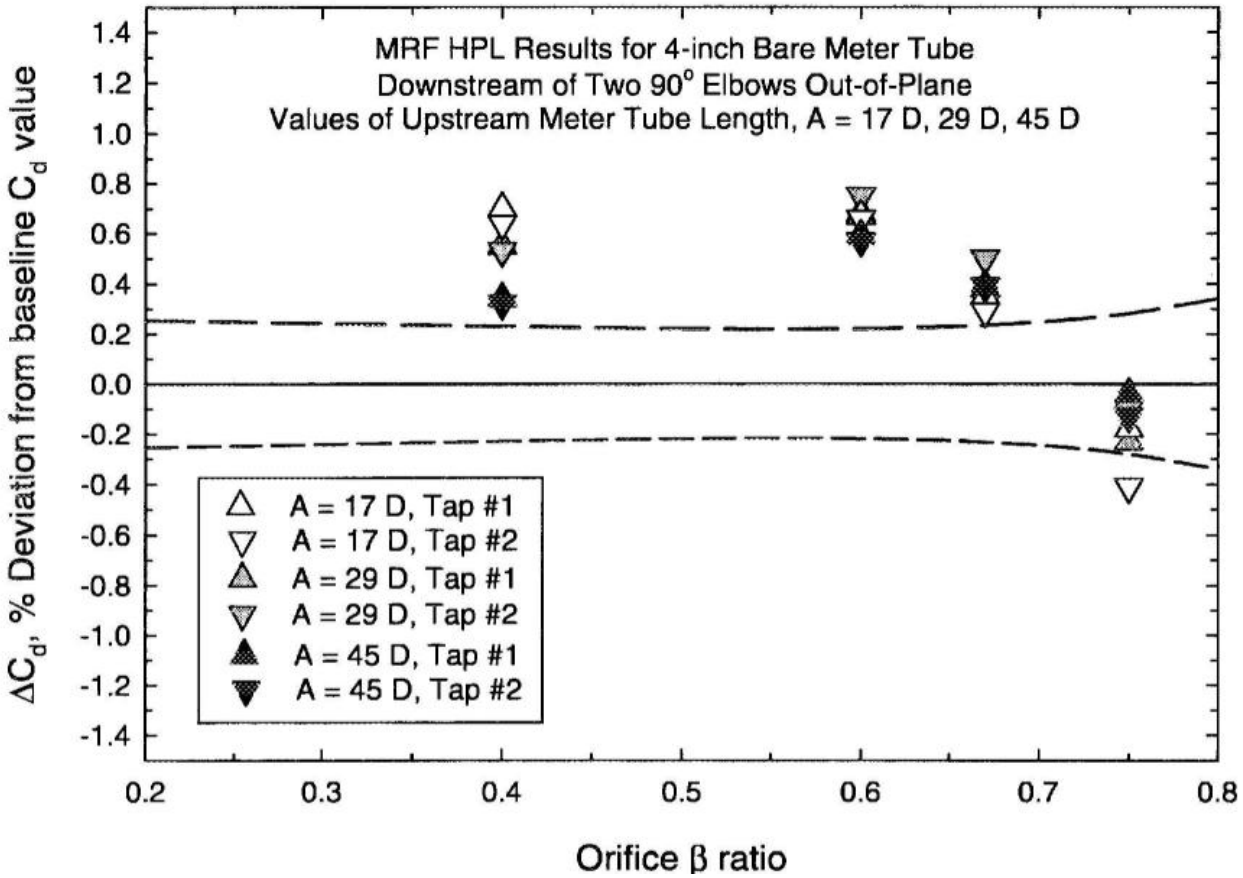

From GRI 97/0207

Straight Pipe – 50% Closed Gate Valve

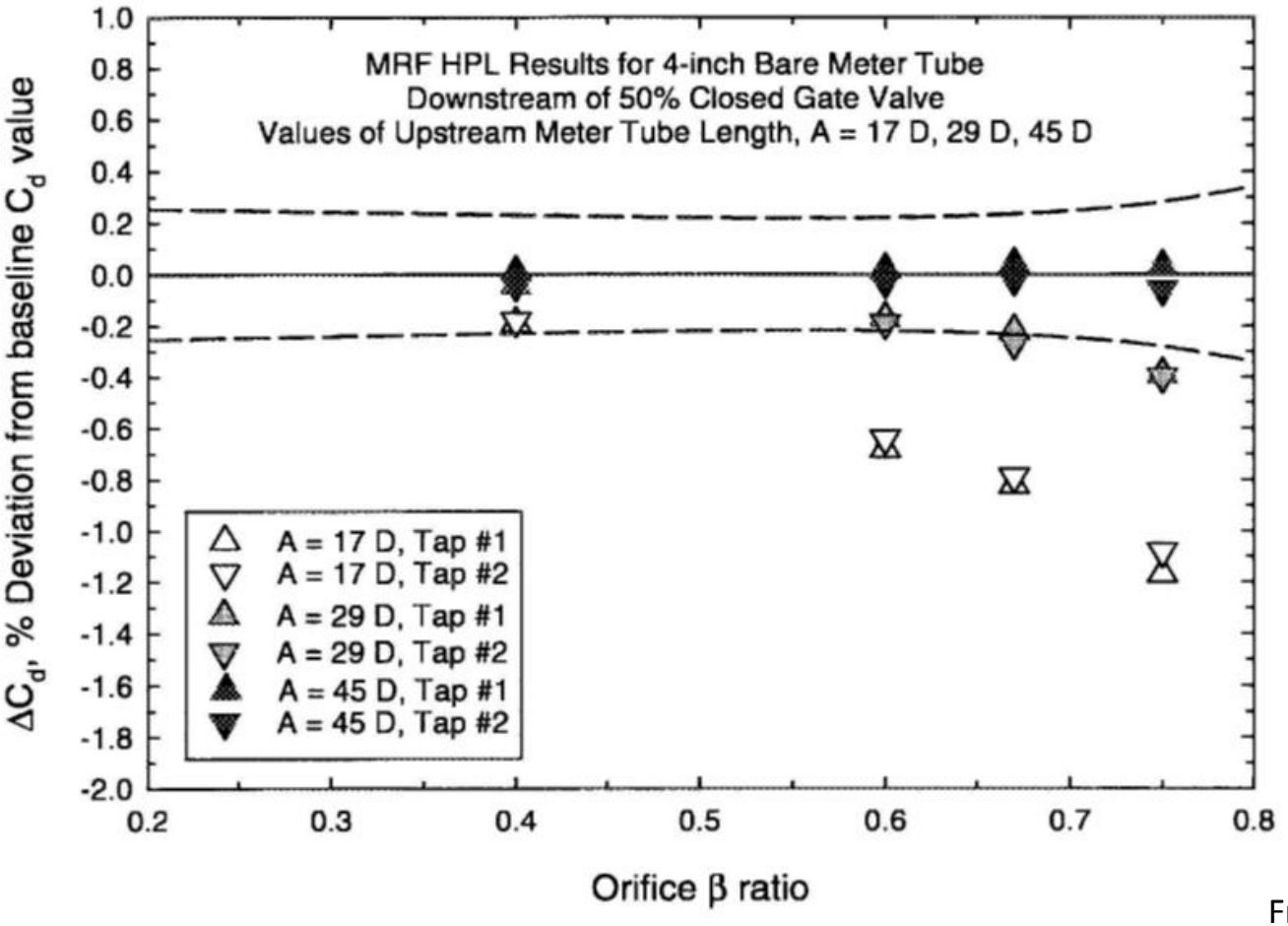

From GRI 97/0207

Straight Pipe – High Swirl

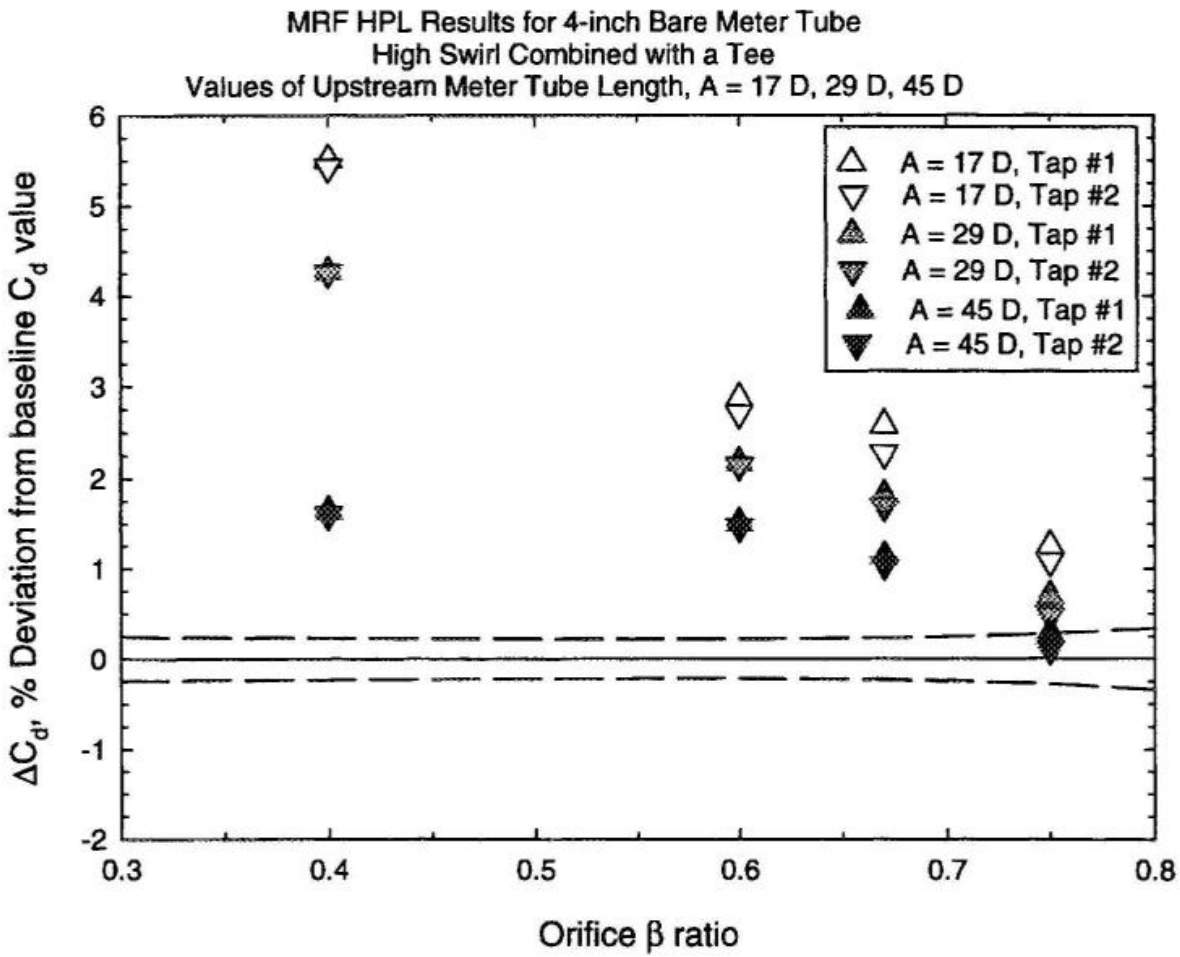

From GRI 97/0207

Tube Bundles

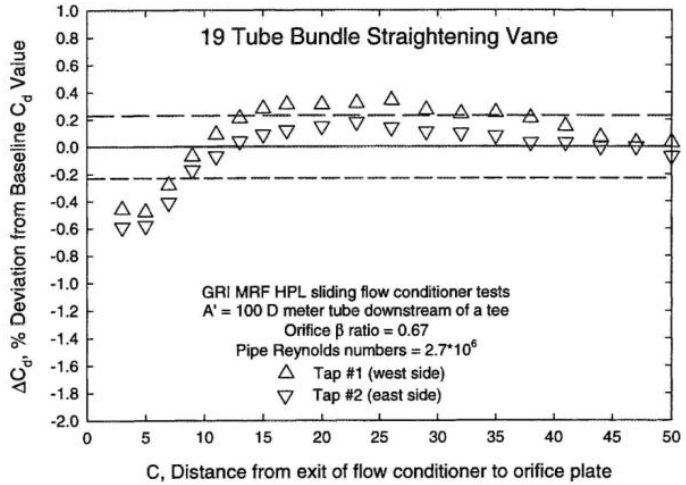

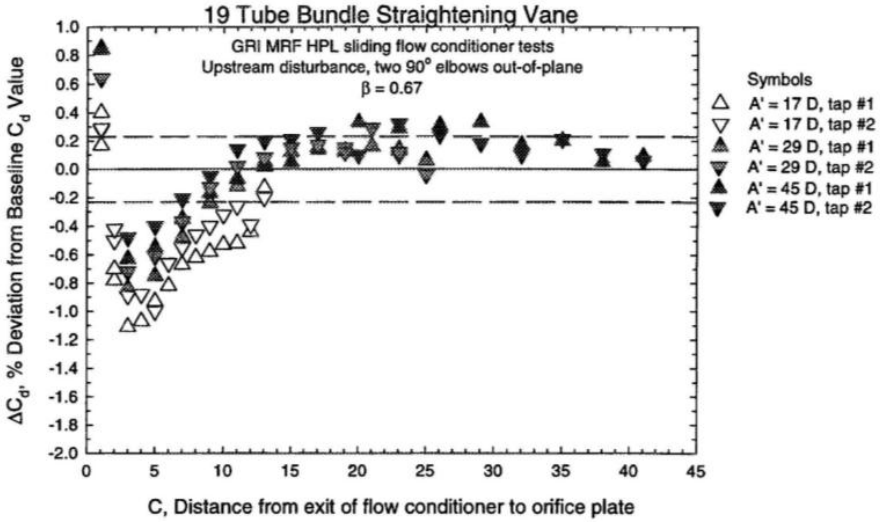

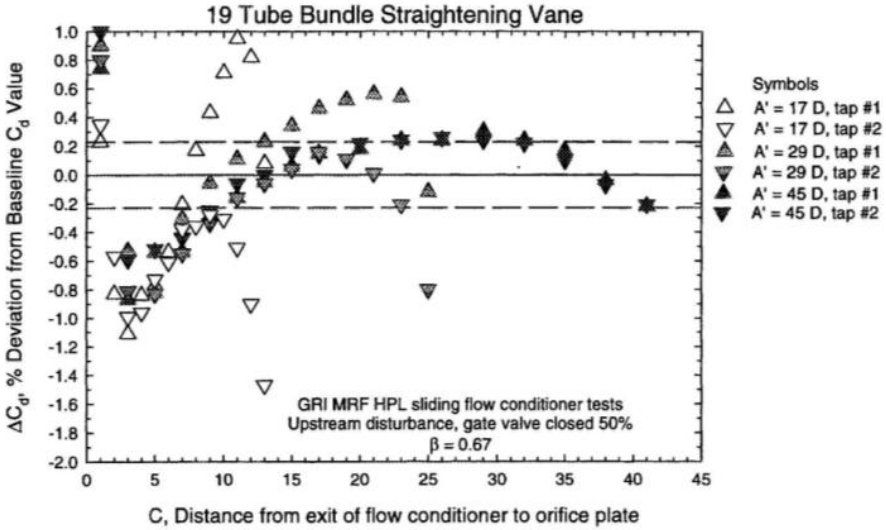

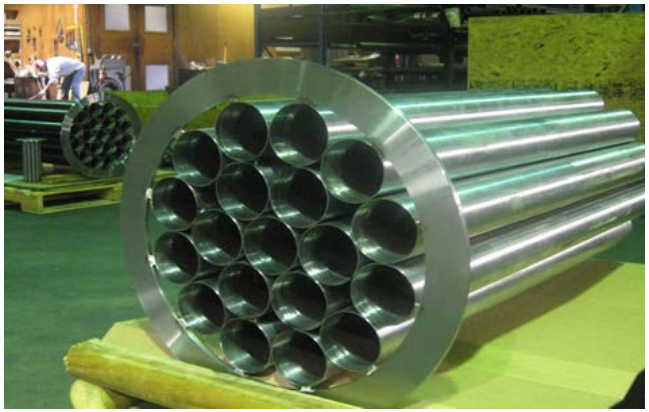

From GRI 97/0207

Tube Bundle Data

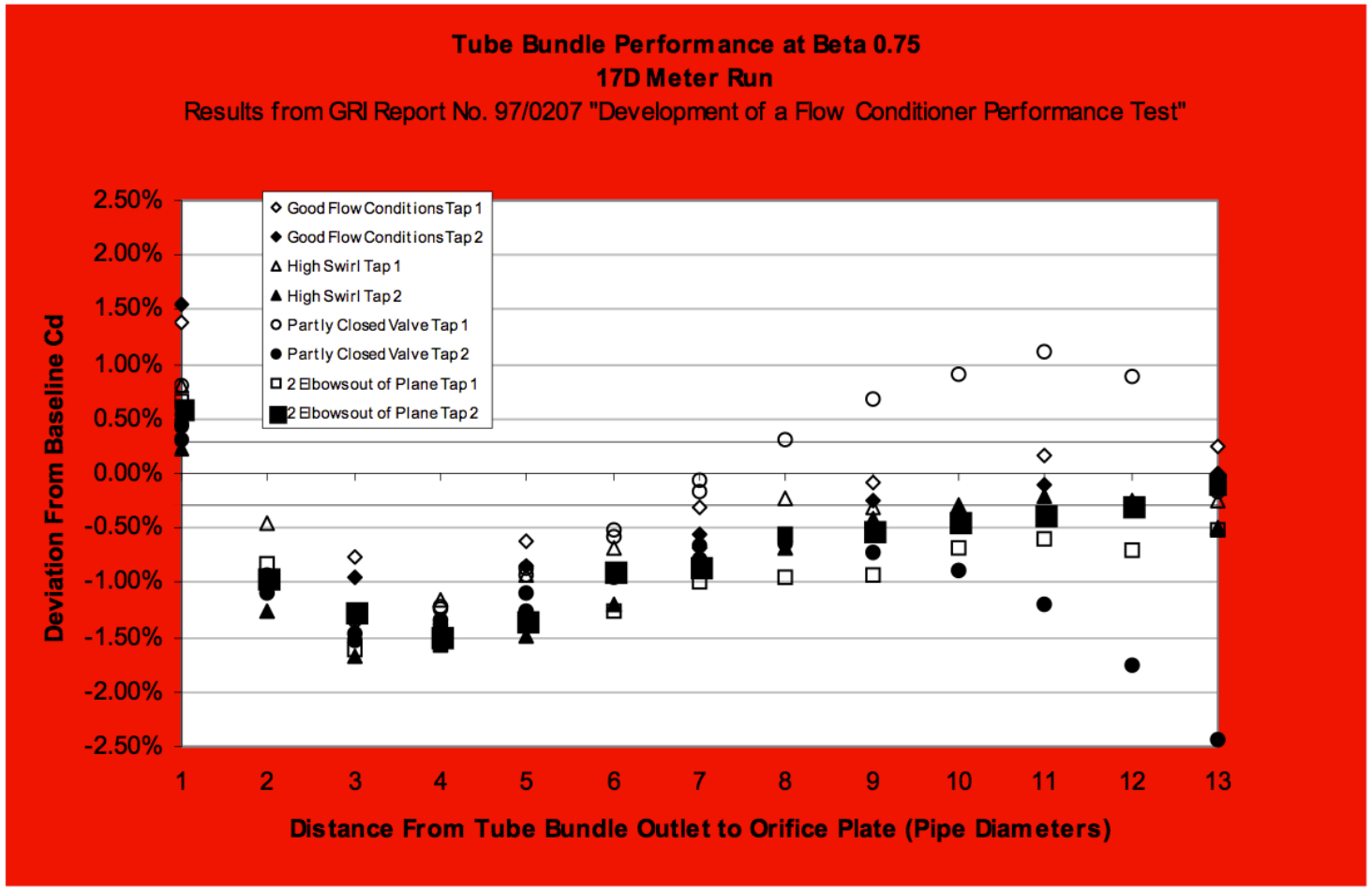

Tube Bundles & Straightening Vanes

- Tube bundles can be very problematic in custody transfer applications.
- AGA3 test data has shown them to be have very unpredictable behavior in scenarios with various upstream configurations.
- A low pressure drop combined with a long length (2 – 3D) result in an inability to properly redistribute the flow profile, while locking in distortions.
- Testing has found tube bundles to cause errors in straight pipe baseline scenarios!
- AGA3 itself shows in table 2-8 that there are configurations where a tube bundles cannot even be used!

17D with Tube Bundle

Table 2-8a—Orifice Meter Installation Requirements With 1998 Uniform Concentric 19-Tube Bundle Flow Straightener for Meter Tube Upstream Length of $17D_i \leq UL < 29D_i$.

	Single 90° elbow $R/D_i = 1.5$	Two 90° elbows out of plane S ≤ 2Di $R/D_i = 1.5$	Single 90° tee used as an elbow but not as a header element	Partially closed valves (at least 50% open)	High swirl combined with single 90° Tee	Any fitting (catch-all category)	Downstream meter tube length
Diameter Ratio, β	UL2	UL2	UL2	UL2	UL2	UL2	DL
0.10	5 – 14.5	5 – 14.5	5 – 14.5	5 – 11	5 – 13	5 – 11.5	2.8
0.20	5 – 14.5	5 – 14.5	5 – 14.5	5 – 11	5 – 13	5 – 11.5	2.8
0.30	5 – 14.5	5 – 14.5	5 – 14.5	5 – 11	5 – 13	5 – 11.5	3.0
0.40	5 – 14.5	5 – 14.5	5 – 14.5	5 – 11	5 – 13	5 – 11.5	3.2
0.50	11.5 – 14.5	9.5 – 14.5	11 – 13	[b]	11 – 13	[c]	3.5
0.60	12 – 13	13.5 – 14.5	[a]	*Not allowed*	[a]	*Not allowed*	3.9
0.67	13	13 – 14.5	*Not allowed*	*Not allowed*	*Not allowed*	*Not allowed*	4.2
0.75	14	*Not allowed*	*Not allowed*	*Not allowed*	*Not allowed*	*Not allowed*	4.5
Recommended tube bundle location for maximum range of β	13 β ≤ 0.67	13.5 – 14.5 β ≤ 0.67	13 β ≤ 0.54	9.5 β ≤ 0.47	13 β ≤ 0.54	9.5 β ≤ 0.46	4.5

[a] $13D_i$ allowed for up to β = 0.54.
[b] $9.5D_i$ allowed for up to β = 0.47.
[c] $9.5D_i$ allowed for up to β = 0.46.
S = Separation distance between elbows, measured as defined in Table 2-7.
UL1 = UL – UL 2 (see Figure 2-6).
Note 1: Lengths shown under the UL2 column are the dimensions shown in Figure 2-6, expressed as the number of published internal pipe diameters (D_i) between the downstream end of the 1998 Uniform Concentric 19-Tube Bundle Flow Straightener and the upstream surface of the orifice plate.
Note 2: The tolerance on specified lengths for UL, UL2, and DL is $\pm 0.25D_i$.
Note 3: *Not allowed* means that it is not possible to find an acceptable location for the 1998 Uniform Concentric 19-Tube Bundle Flow Straightener downstream of the particular fitting for all values of UL.

From AGA Report No. 3, 2000 Edition

Plate Based Isolating Flow Conditioners

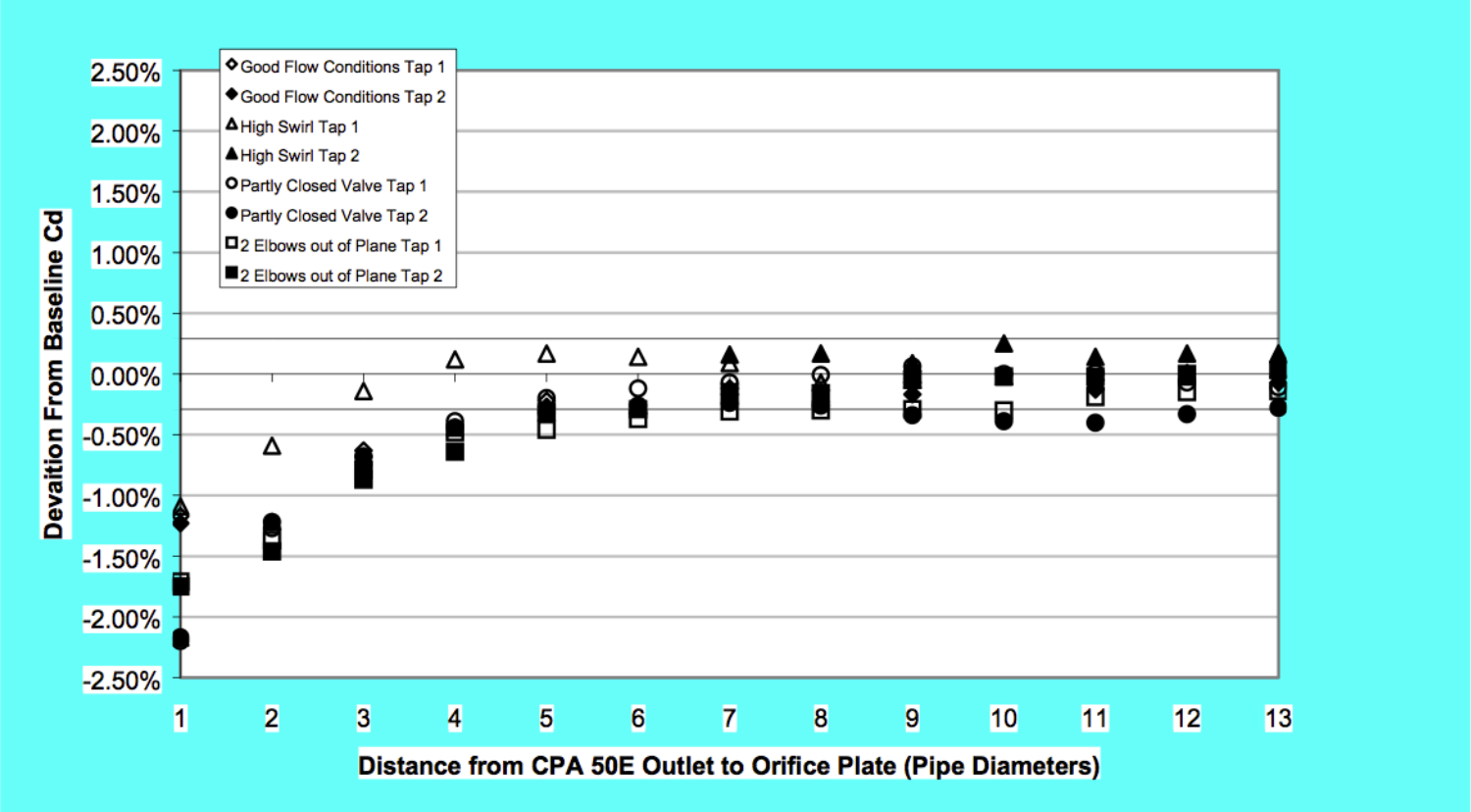

dP Uncertainty

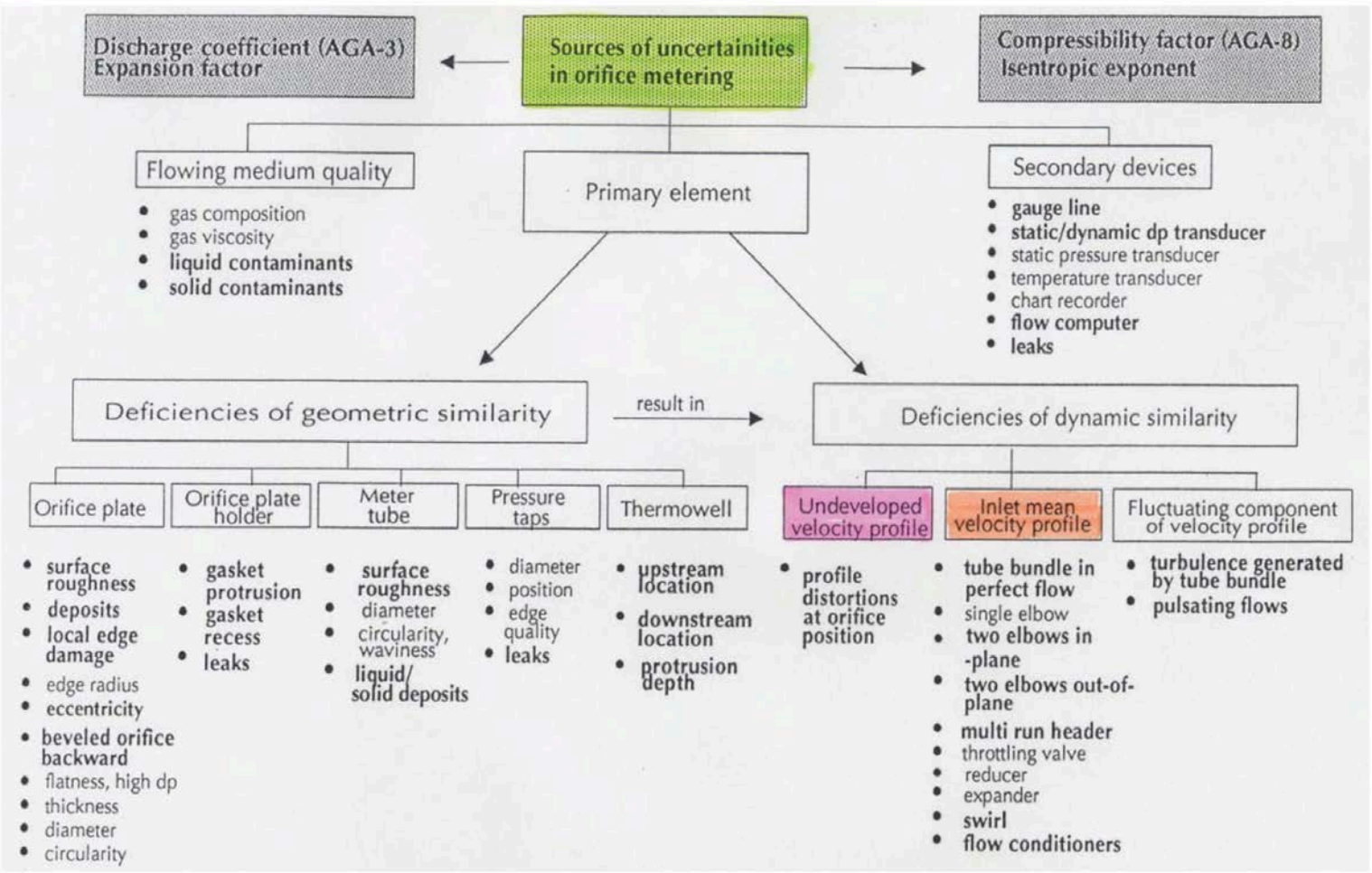

Cone Meters

- Similar to other dP devices.
- Have a high pressure and a low pressure tap.
- Has a unique geometry that forces flow to the outside of the pipe.
- High pressure tap is in a similar location as with a orifice plate or venturi, but low pressure tap is in the center of the element geometry.
- Supposed to be highly immune to installation effects and swirl, requires only 0 – 3 upstream pipe diameters and no flow conditioning.

Cone Meters

- Similar to other dP devices.
- Have a high pressure and a low pressure tap.
- Has a unique geometry that forces flow to the outside of the pipe.
- High pressure tap is in a similar location as with a orifice plate or venturi, but low pressure tap is in the center of the element geometry.
- Supposed to be highly immune to installation effects and swirl, “requires” only 0 – 3 upstream pipe diameters and no flow conditioning.

Cone Meters

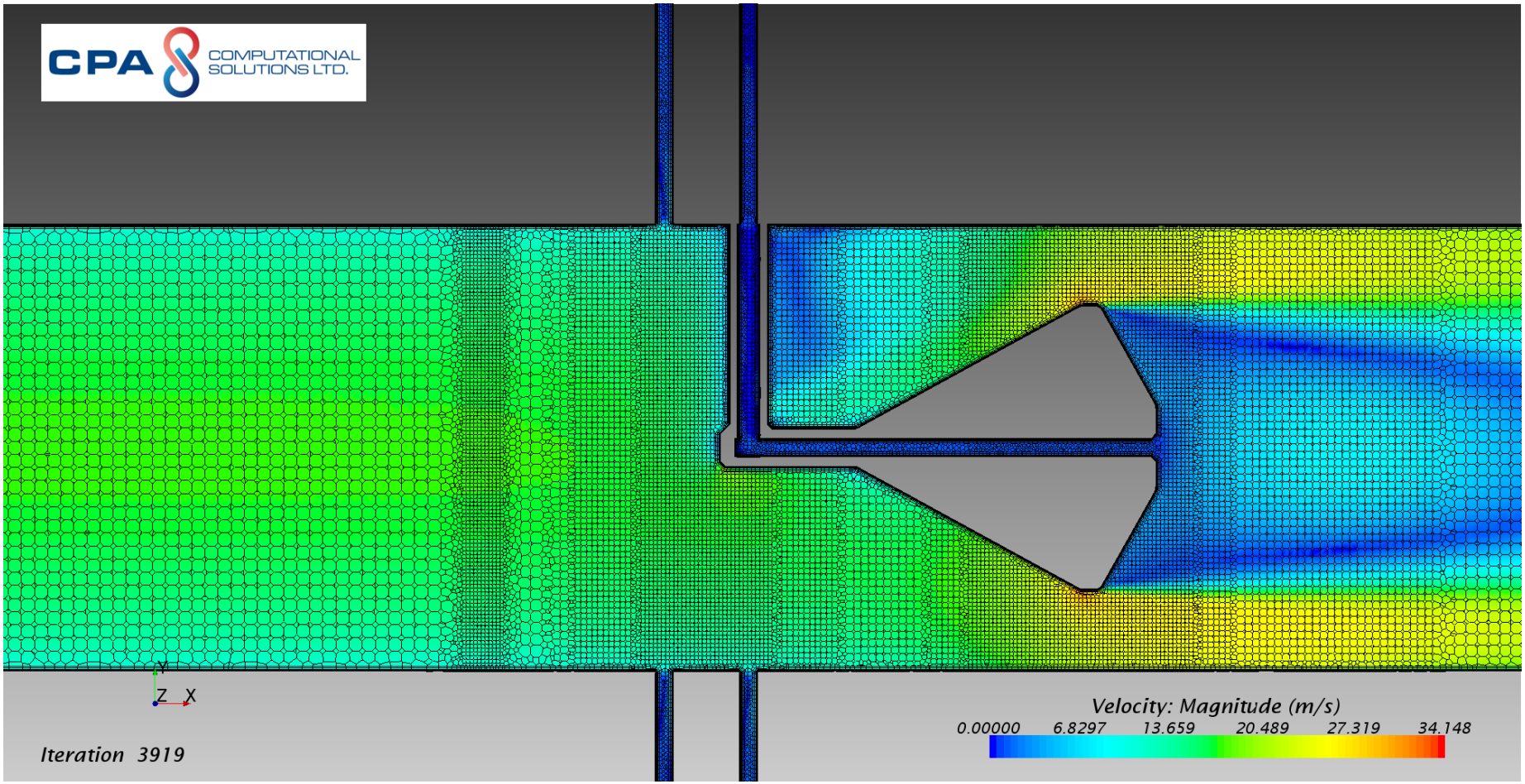
CPA COMPUTATIONAL SOLUTIONS LTD.
Y
Z X
Iteration 3919
Velocity: Magnitude (m/s)
0.00000 6.8297 13.659 20.489 27.319 34.148

Cone Meters

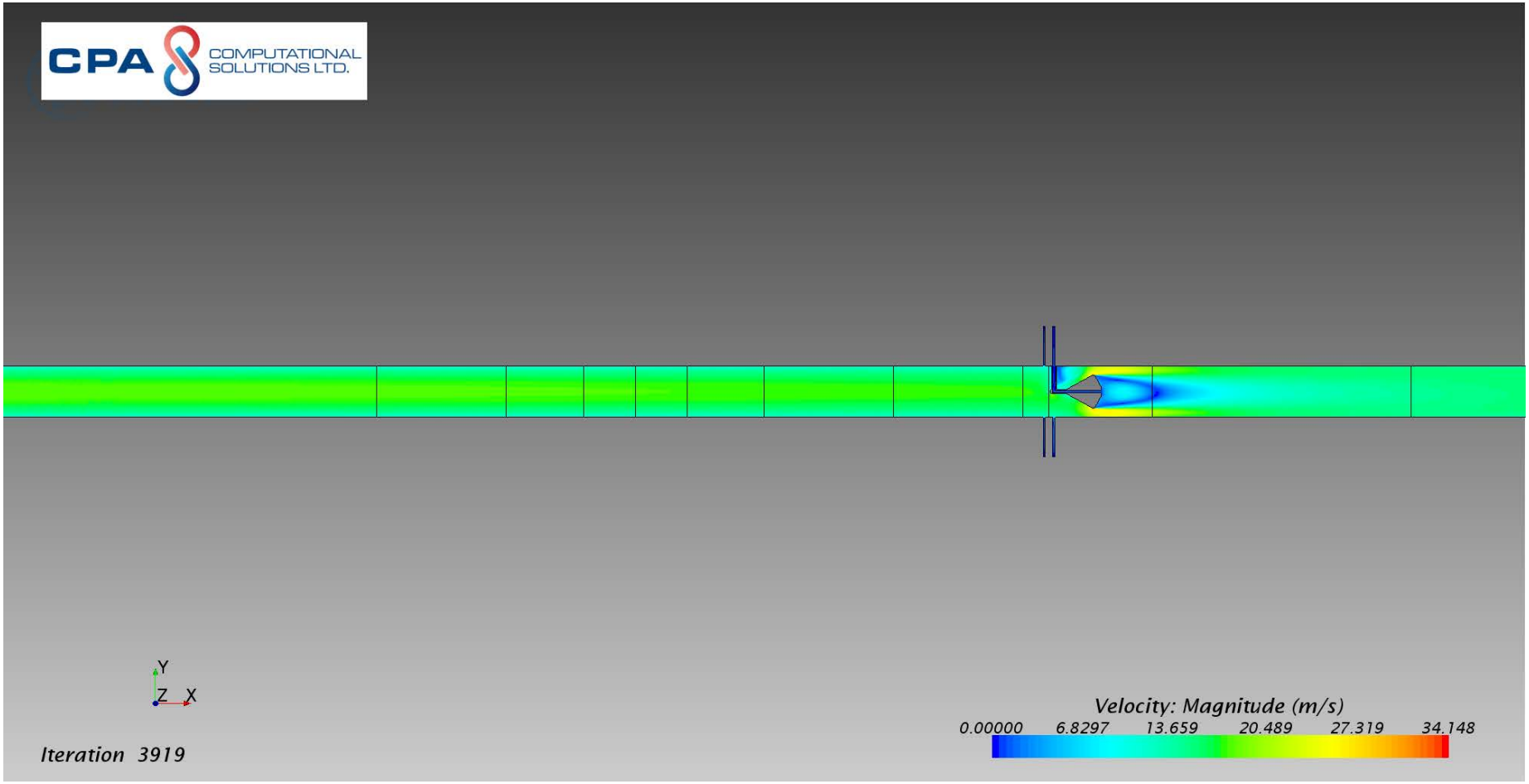
CPA COMPUTATIONAL SOLUTIONS LTD.
Y
Z X
Iteration 3919
Velocity: Magnitude (m/s)
0.00000 6.8297 13.659 20.489 27.319 34.148

Cone Meters, with Upstream Disturbances

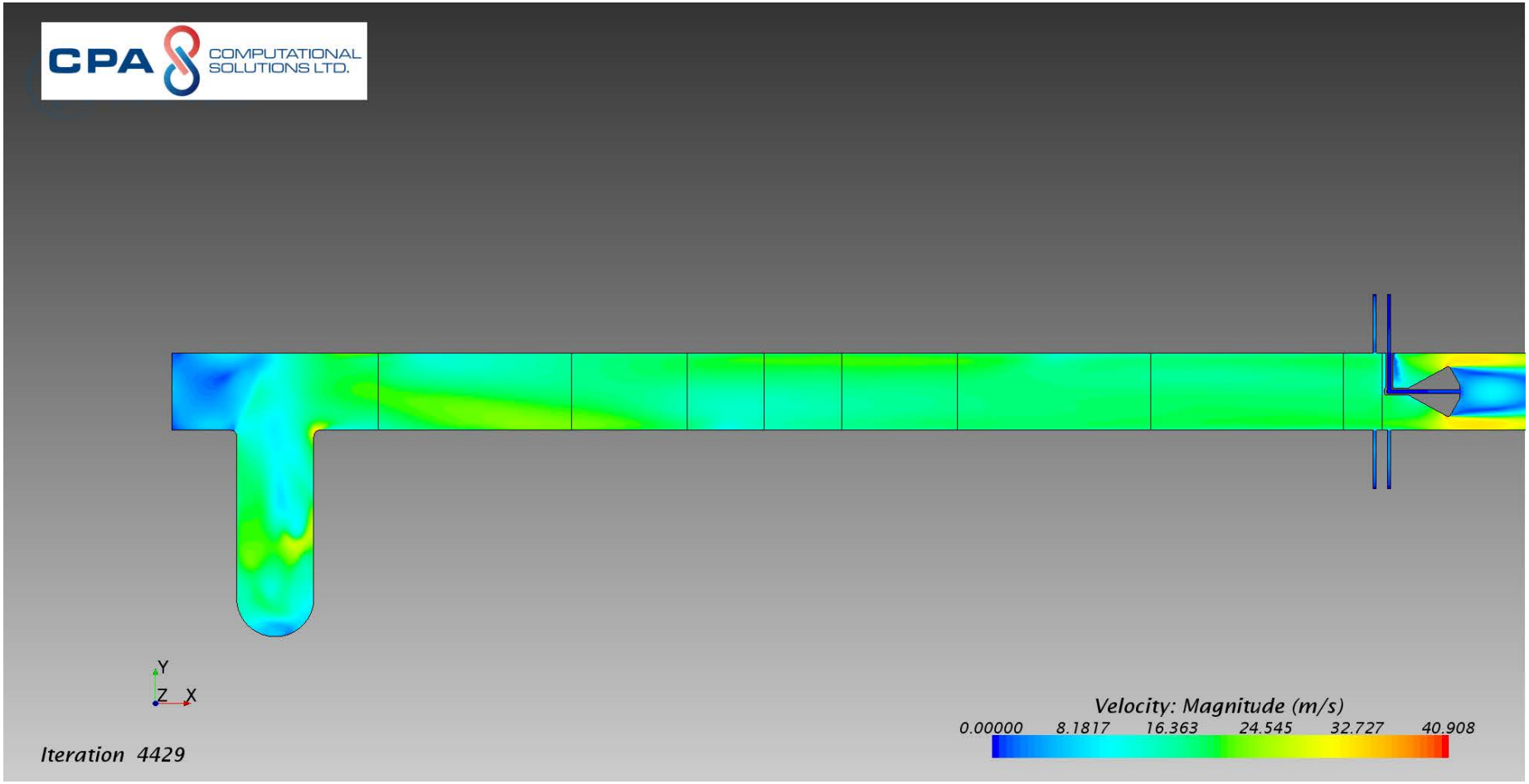

Cone Meters, with Upstream Disturbances

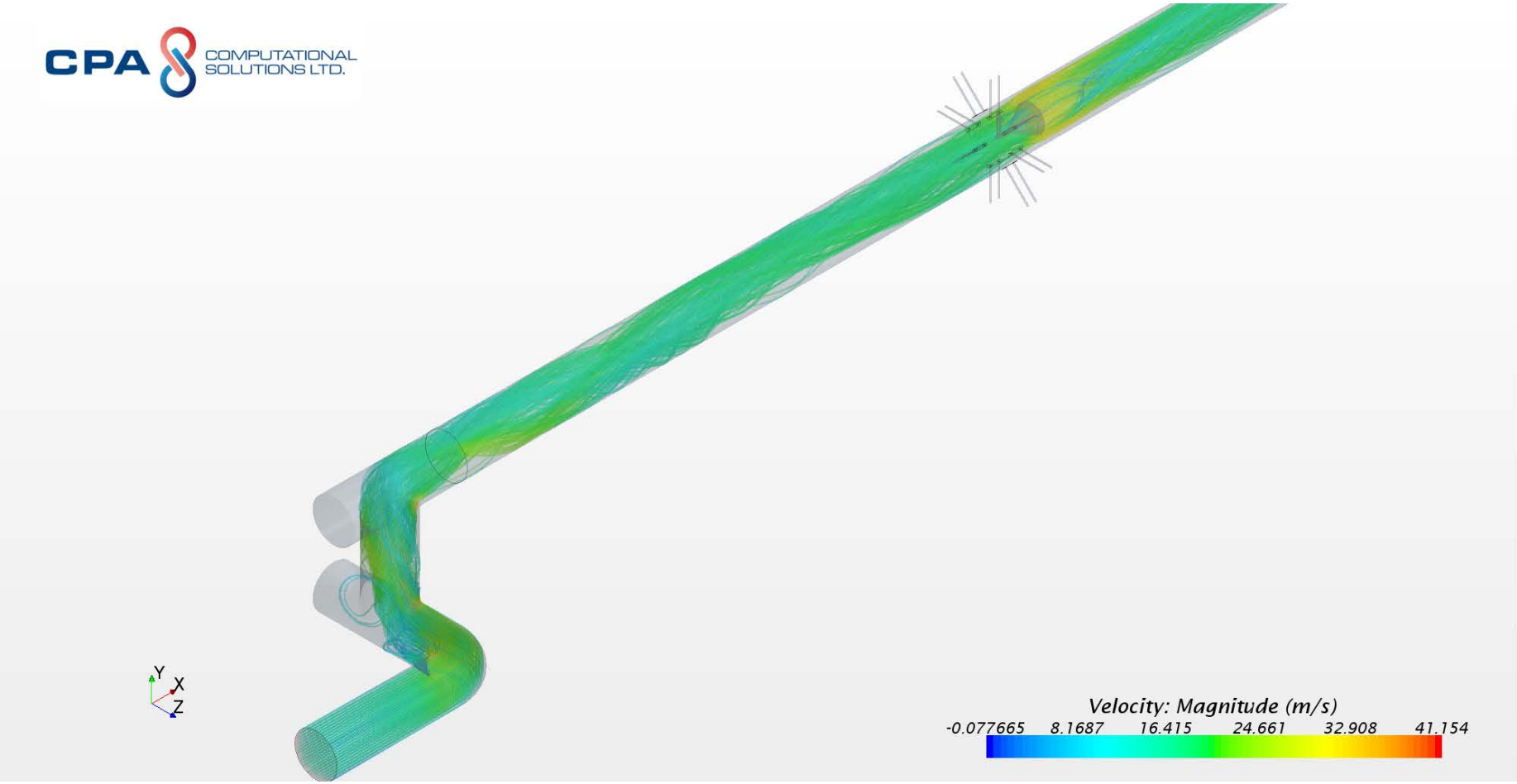

Cone Meters, with Swirl

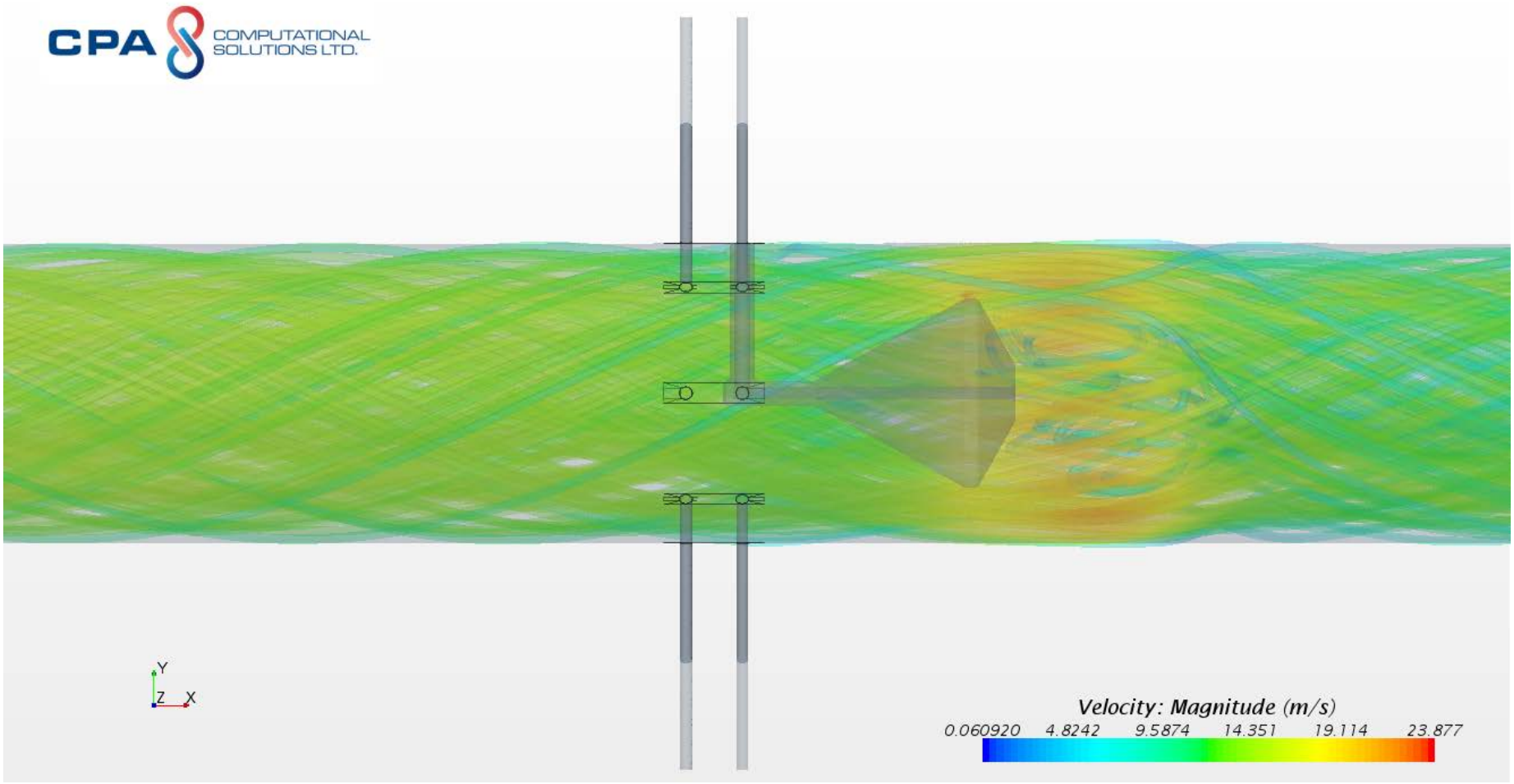

Cone Meters

- Do cone meters need flow conditioner and a minimum amount of upstream pipe?
- Tees upstream, 13D of straight pipe, 0.6b, ~0.5% deviation from baseline.
- 30 degrees of swirl, 13D of straight pipe, 0.6b, ~4.6% deviation from baseline.

Turbine Meters

- Fluid rotation in the direction of the meter rotation causes the meter to under register.
- Fluid rotation in the opposite direction of the meter rotation causes the meter to over register.
- Dual rotor designs are less susceptible to this.
- Often, turbine meters will have straightening vanes in the inlet in an basic attempt at flow conditioning.

Turbine Meters

- Turbine meters with nose cones redirect flow towards the outside of the fluid passage.
- This movement amplifies disturbances within the flow profile
- Turbine meters need to see a well flow conditioned bulk fluid flow.
- Asymmetrical or peaky flow profiles will cause the turbine to over register.

Turbine Meters

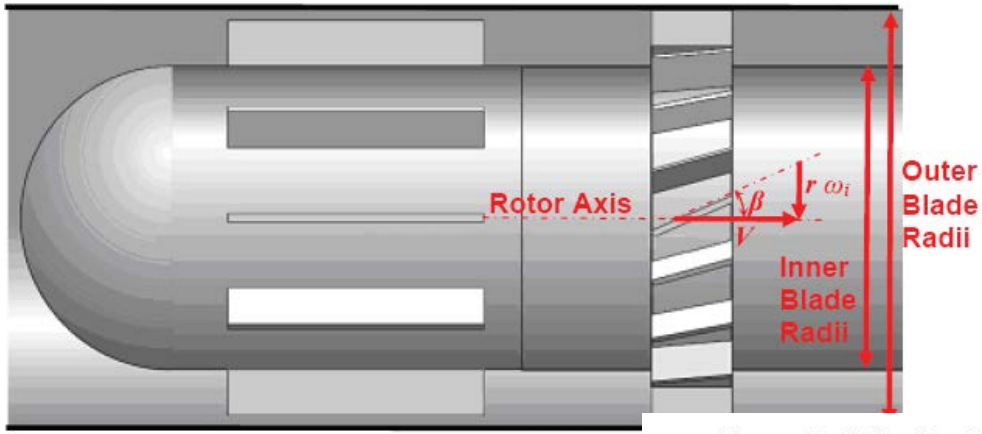

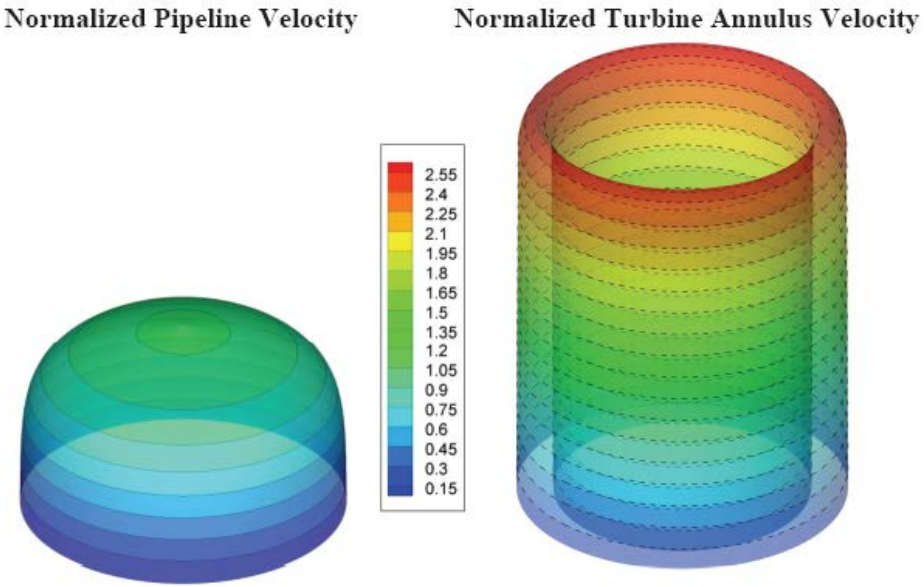

Turbine Meters

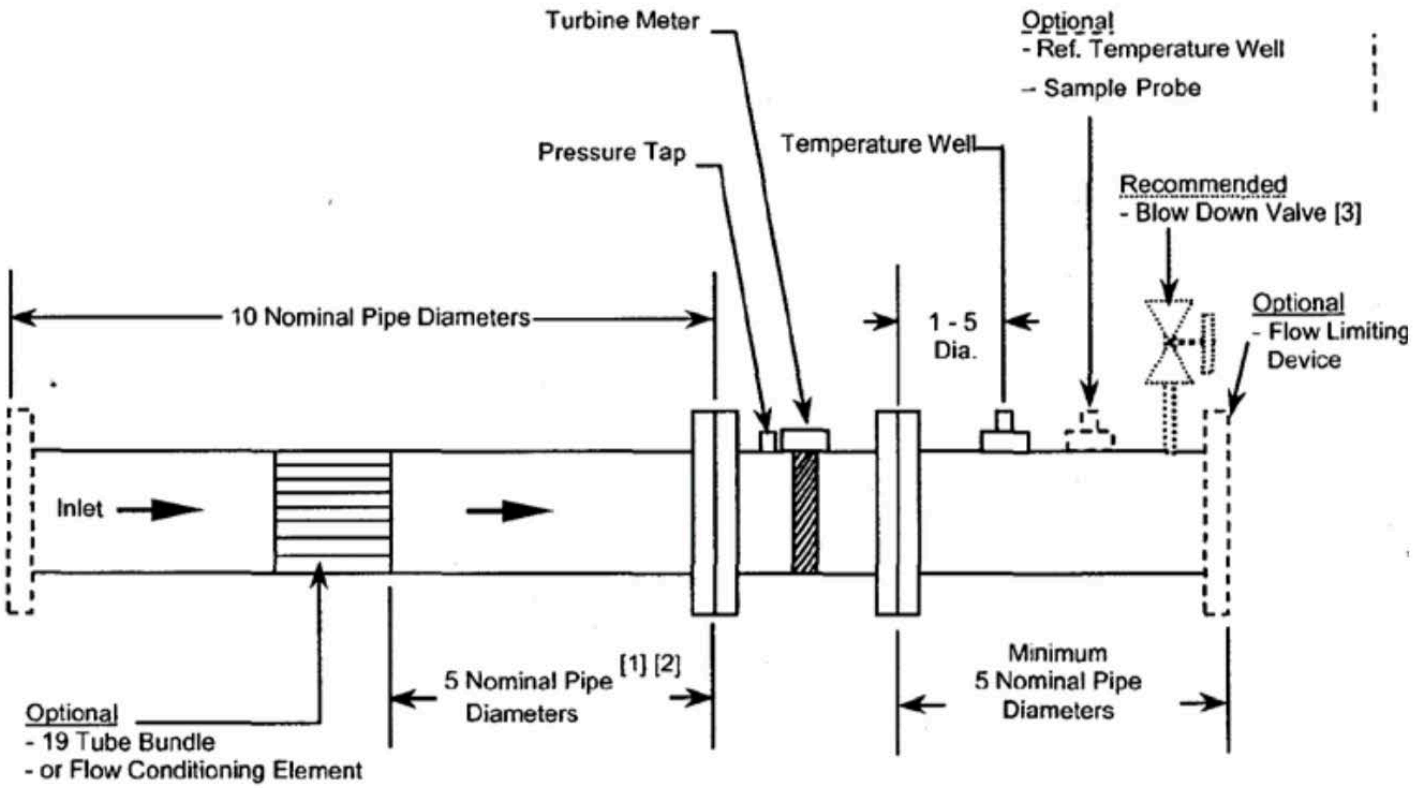

NOTES: [1] Recommended spacing, unless otherwise supported by published test data for the flow conditioning element.
[2] No pipe connections or protrusions allowed within this upstream section.
[3] For recommended size of blow down valve, see Table 1. Locate downstream of meter.

Turbine Meters

Table 1. Comparison of the participating facilities

	Bishop Auckland	Didsbury	GRI MRF HPL	Groningen	pigsar™	Westerbork	TCC
Line Pressure kPa	3000 to 6000	4000 to 6000	1035 to 8275	900 to 4100	1500 to 5000	6200	7040
Operating Fluid	Natural gas	Natural gas	Nitrogen or Natural gas	Natural gas	Natural gas	Natural gas	Natural gas
Maximum Flow Capacity	314 kg/s	24 kg/s	44 kg/s	8.2 kg/s	72 kg/s	622 kg/s	770 kg/s
Primary Reference	N/A	Wöhwa Scale	Wöhwa Scale	CVM meters	Piston Prover	N/A	Rotary Piston Prover
Secondary Reference	Calibrated turbine	Calibrated nozzles, turbines, orifice	Calibrated nozzles, turbines, orifice	Calibrated turbine	Calibrated turbine	Calibrated turbine	Calibrated turbine
Uncertainty in Primary Mass Flow	N/A	±0.06%	±0.04%	±0.18%	±0.01%	N/A	N/A
Uncertainty in Secondary Mass Flow	±0.21% < 40 kg/s ±0.25% > 40 kg/s	±0.2%	±0.2%	±0.19%	±0.15%	±0.15% > 16kg/s ±0.3% < 16 kg/s	±0.2% > 25kg/s ±0.3% < 25 kg/s

Turbine Meters

3 THE CENTAUR PACKAGE

The CENTAUR package shown in Figure 1 was provided in two parts.

1. The ultrasonic meter with the 1.343 m (6.63D) spool piece followed by a NOVA 50E flow conditioner and the 1.678 m (8.3D) spool piece upstream.
2. The turbine meter with the 2.095 m (10.33D) upstream spool and the 1.35 m (6.66D) downstream spool as the second piece.

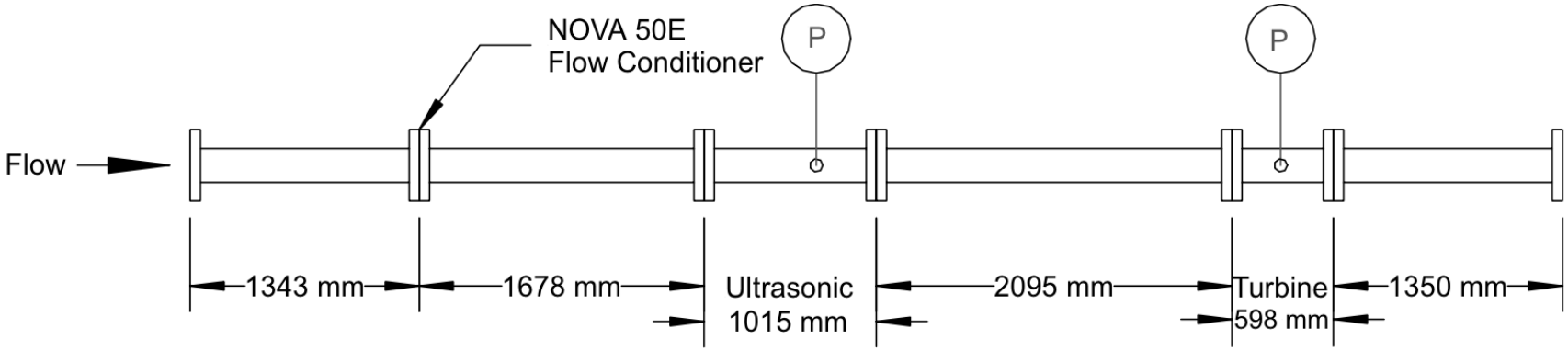

Figure 1. The CENTAUR Transfer Standard Package.

Turbine Meters

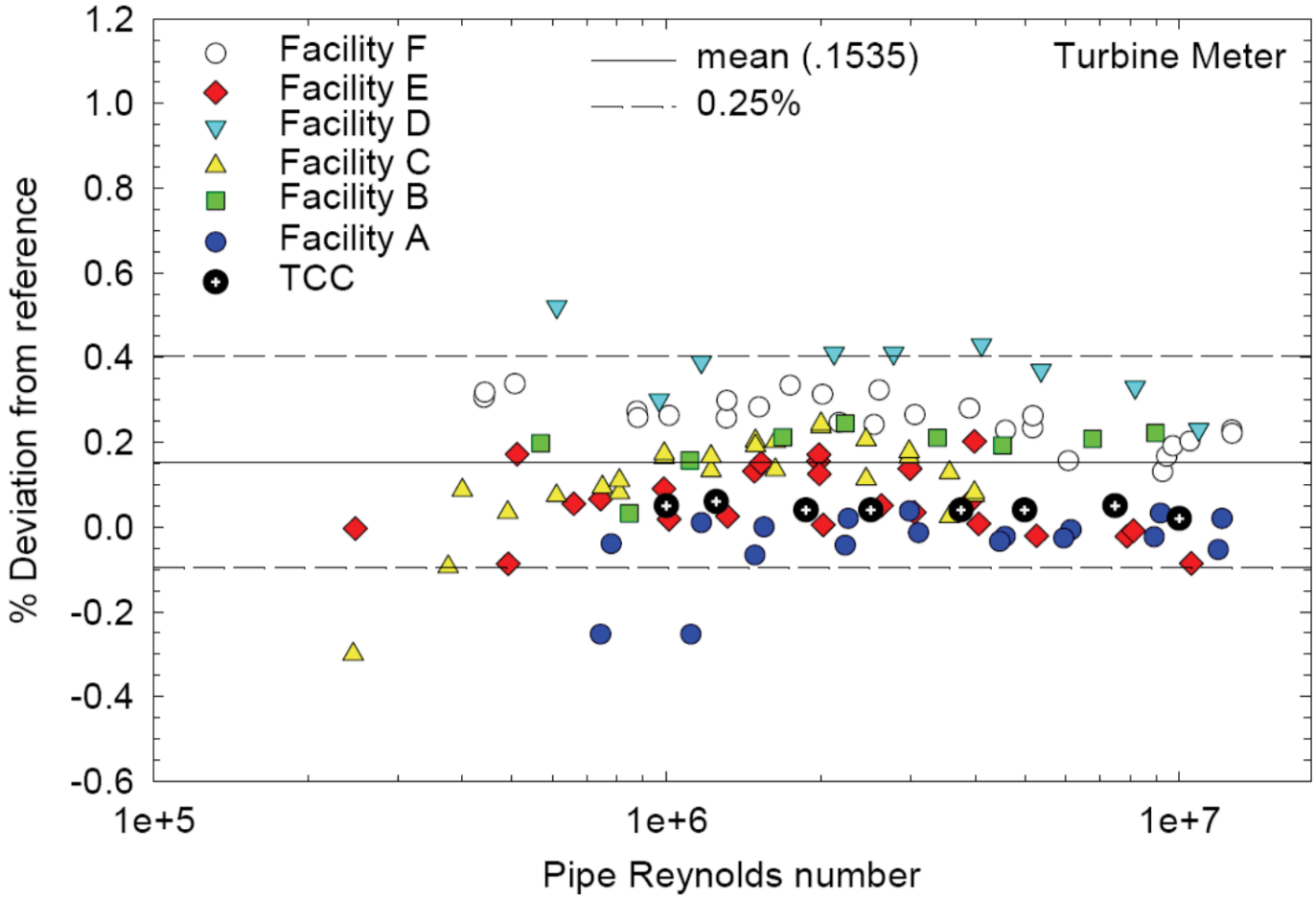

Turbine Meters

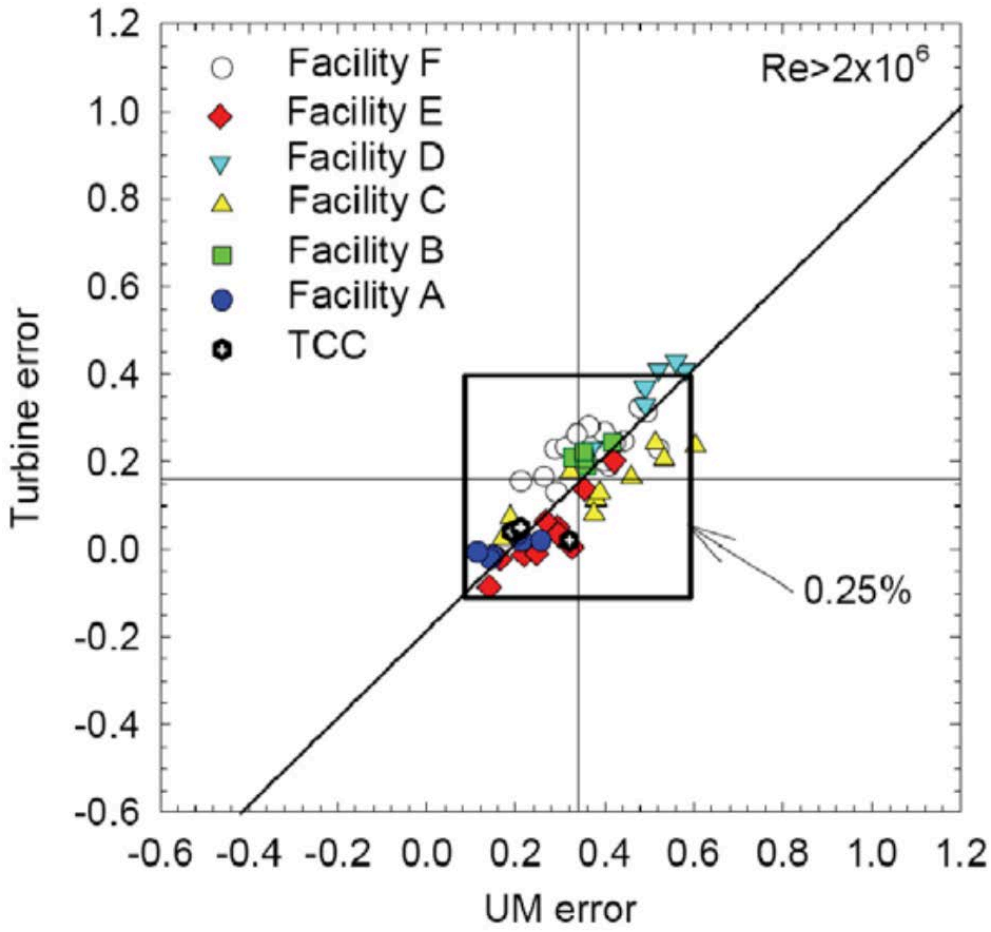

Ultrasonic Meters

- Rely on a noise pulse that is transmitted through the fluid and the flow rate is computed using the transit time.
- Transit time is affected by velocity disturbances within the pipe, slowing or speeding up the pulse.
- Multiple paths help to generate a complete picture of the cross sectional flow within the pipe.
- The meter only knows how long it took for the pulse to travel from point A to point B.
- It cannot guess the state of the flow along the way.

Ultrasonic Meters

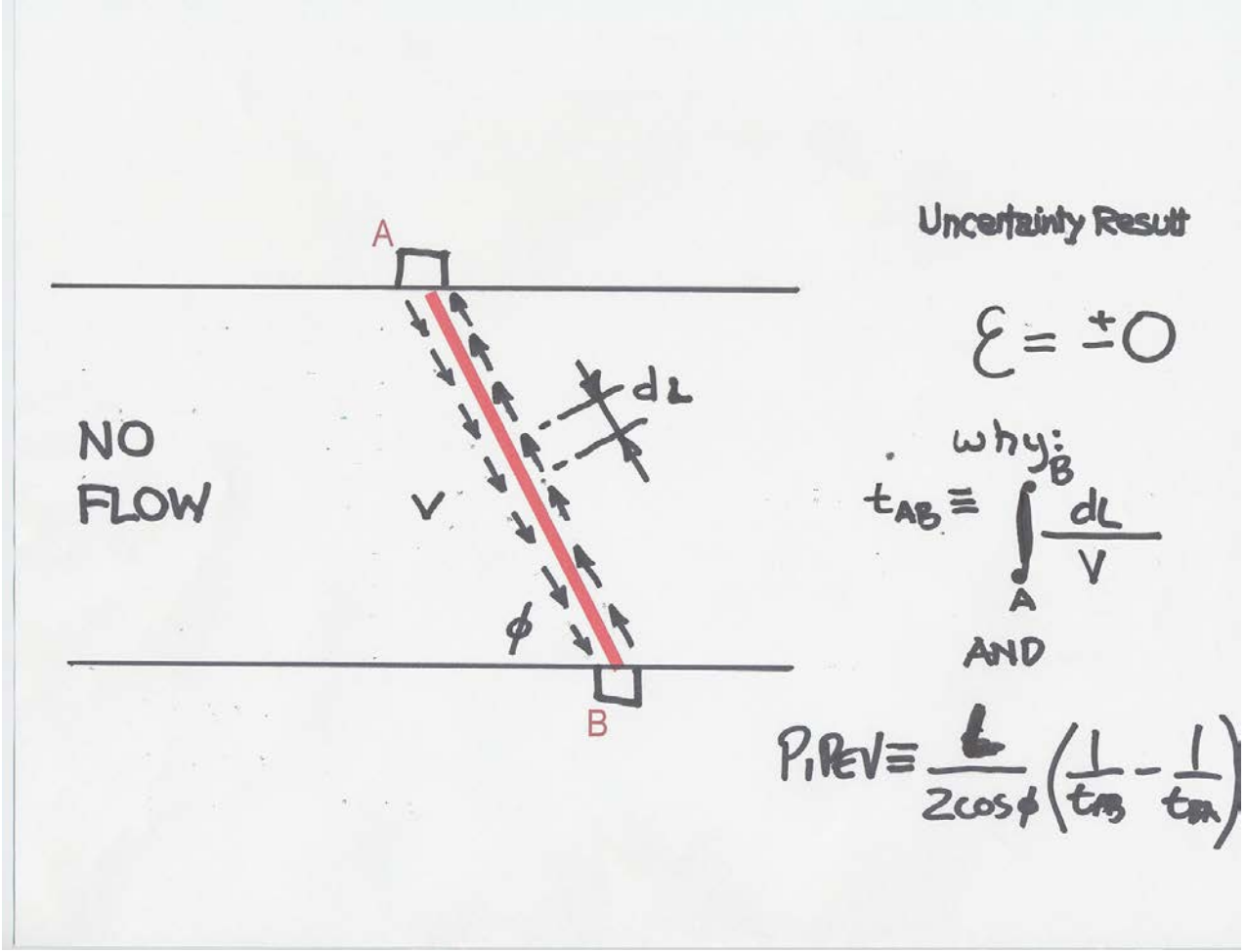

Ultrasonic Meters

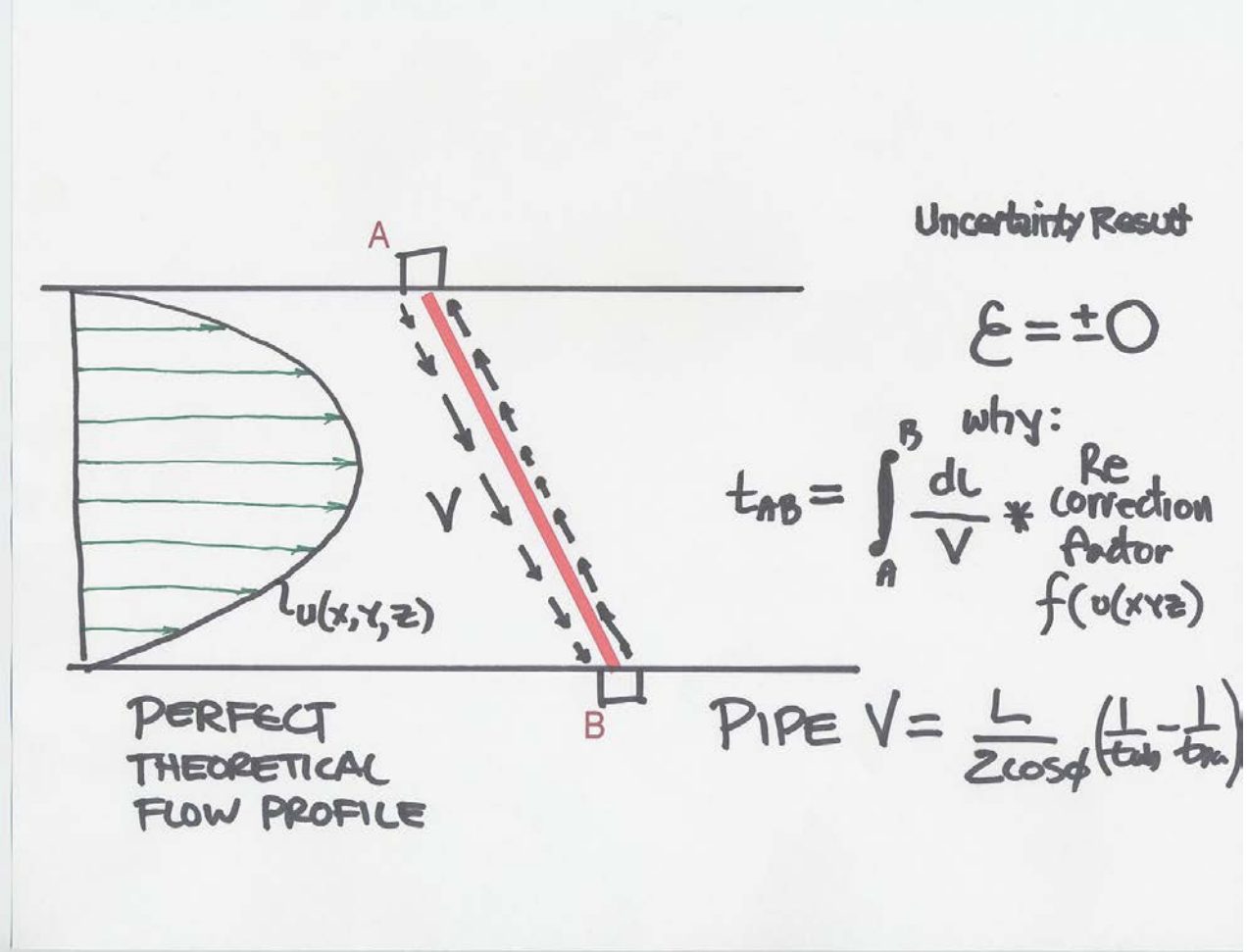

Ultrasonic Meters

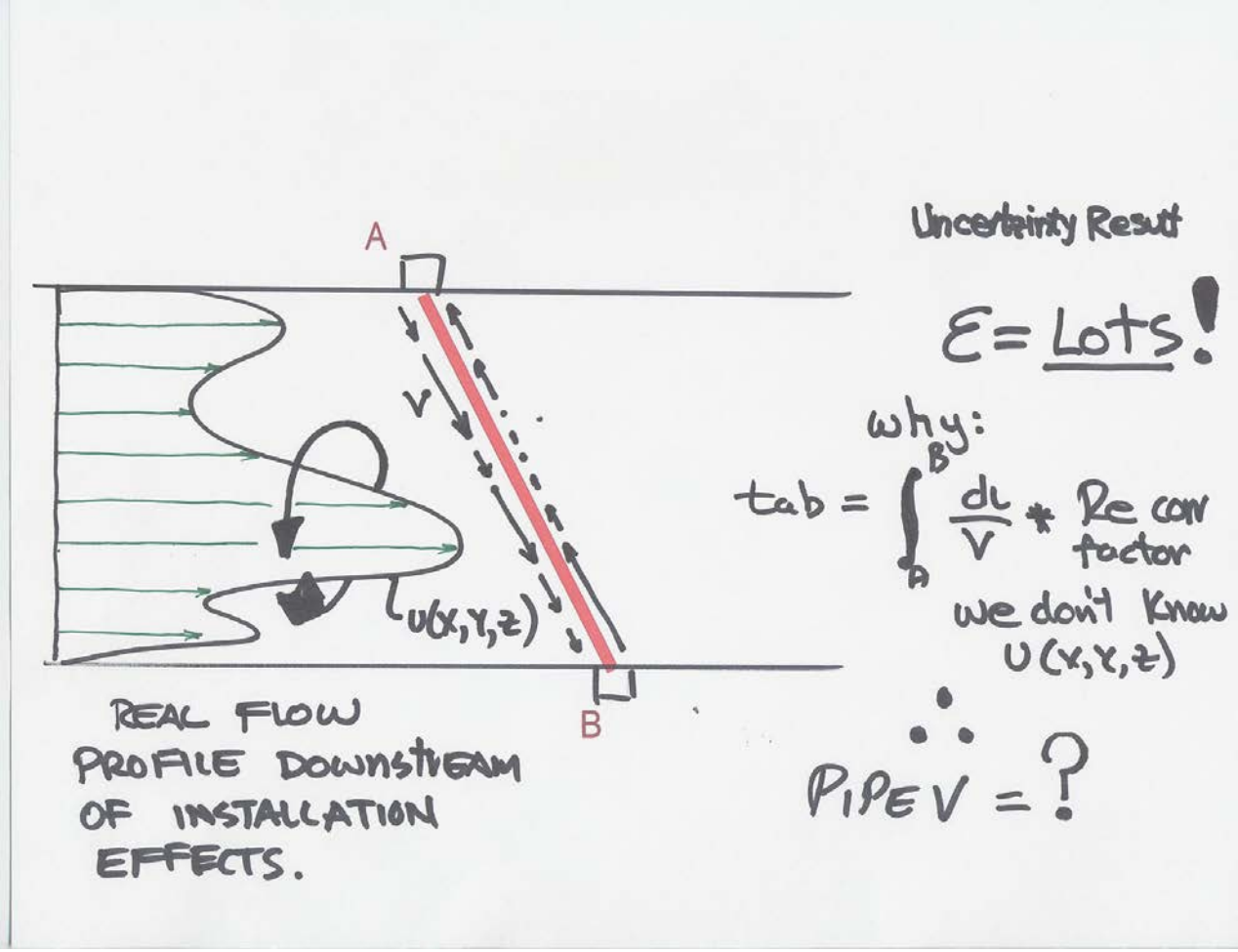

Ultrasonic Meters – 4 Path Data

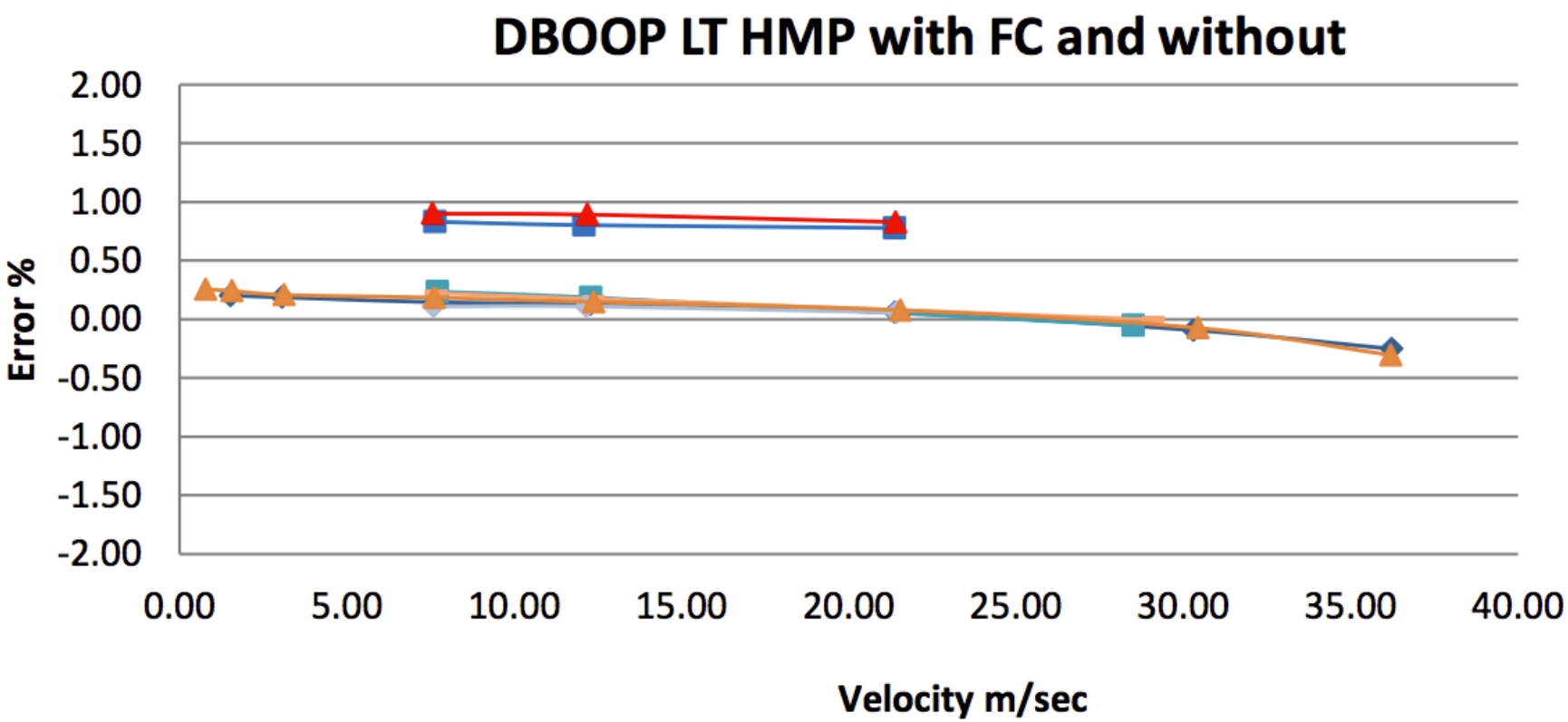

USM Results

			SawchukSonic Meter Performance					
			1 Path, USM Final	1 Path, 1/4 Path, USM Final	2 Path, USM Final	3 Path, USM Final	4 Path, USM Final	7 Path, USM Final
Dual Elbows In Plane	1D	No FC	6.879%	4.359%	3.357%	4.534%	3.365%	0.226%
Dual Elbows In Plane	1D	CPA 55E	4.365%	0.183%	0.313%	1.211%	1.312%	0.202%
	Error Change		-36.54%	-95.80%	-90.67%	-73.29%	-61.01%	-10.72%
Dual Elbows In Plane	5D	No FC	5.231%	2.870%	0.492%	1.629%	1.131%	0.082%
Dual Elbows In Plane	5D	CPA 55E	1.535%	1.519%	0.098%	0.382%	0.266%	0.009%
	Error Change		-70.65%	-47.09%	-80.19%	-76.55%	-76.48%	-89.68%
Dual Elbows Out Of Plane	1D	No FC	4.808%	1.968%	0.619%	1.743%	1.399%	0.235%
Dual Elbows Out Of Plane	1D	CPA 55E	3.686%	0.466%	0.405%	0.960%	1.064%	0.150%
	Error Change		-23.34%	-76.34%	-34.55%	-44.90%	-23.99%	-36.14%
Dual Elbows Out Of Plane	5D	No FC	2.914%	3.140%	0.310%	0.969%	0.522%	0.186%
Dual Elbows Out Of Plane	5D	CPA 55E	1.150%	1.825%	0.334%	0.181%	0.123%	0.016%
	Error Change		-60.55%	-41.88%	7.80%	-81.35%	-76.42%	-91.25%
Dual Tees In Plane	1D	No FC	4.639%	3.199%	0.015%	1.620%	1.527%	0.143%
Dual Tees In Plane	1D	CPA 55E	2.659%	3.139%	0.005%	0.866%	0.880%	0.094%
	Error Change		-42.68%	-1.88%	-69.45%	-46.56%	-42.33%	-34.15%
Dual Tees Out Of Plane	1D	No FC	4.580%	2.421%	0.772%	2.094%	1.388%	0.153%
Dual Tees Out Of Plane	1D	CPA 55E	3.553%	1.128%	0.066%	1.147%	1.119%	0.050%
	Error Change		-22.41%	-53.41%	-91.43%	-45.20%	-19.43%	-67.33%
Dual Tees Out Of Plane	5D	No FC	8.184%	1.705%	0.317%	2.755%	2.306%	0.180%
Dual Tees Out Of Plane	5D	CPA 55E	3.196%	5.013%	0.115%	1.184%	0.712%	0.055%
	Error Change		-60.95%	194.08%	-63.67%	-57.00%	-69.11%	-69.23%
Dual 45's In Plane	1D	No FC	4.046%	0.907%	0.795%	0.885%	1.373%	0.380%
Dual 45's In Plane	1D	CPA 55E	1.530%	0.259%	0.437%	0.150%	0.375%	0.099%
	Error Change		-62.18%	-71.39%	-44.95%	-83.11%	-72.66%	-73.87%

USM Path Layouts

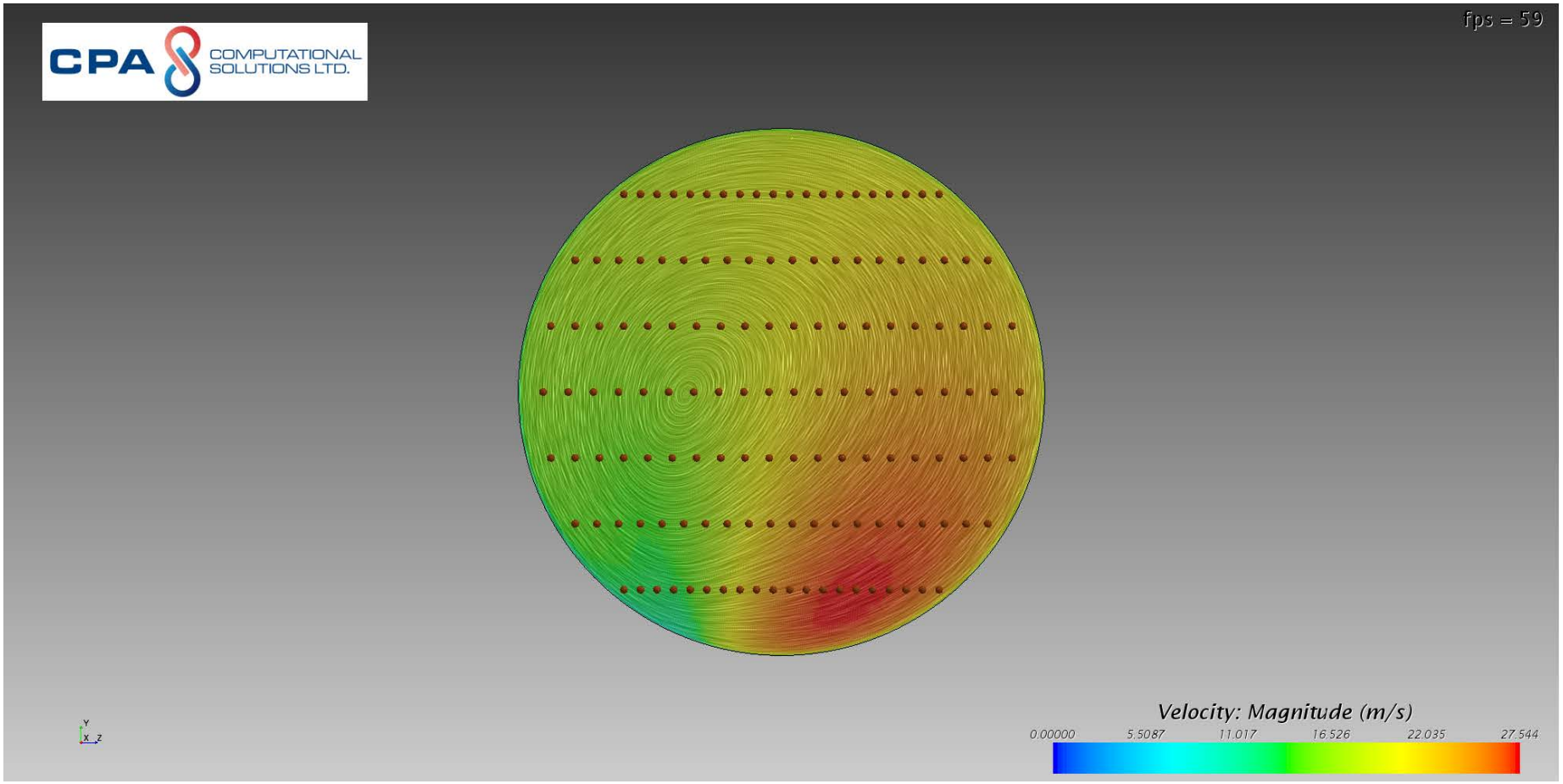

Flow Conditioning Swirl Removal

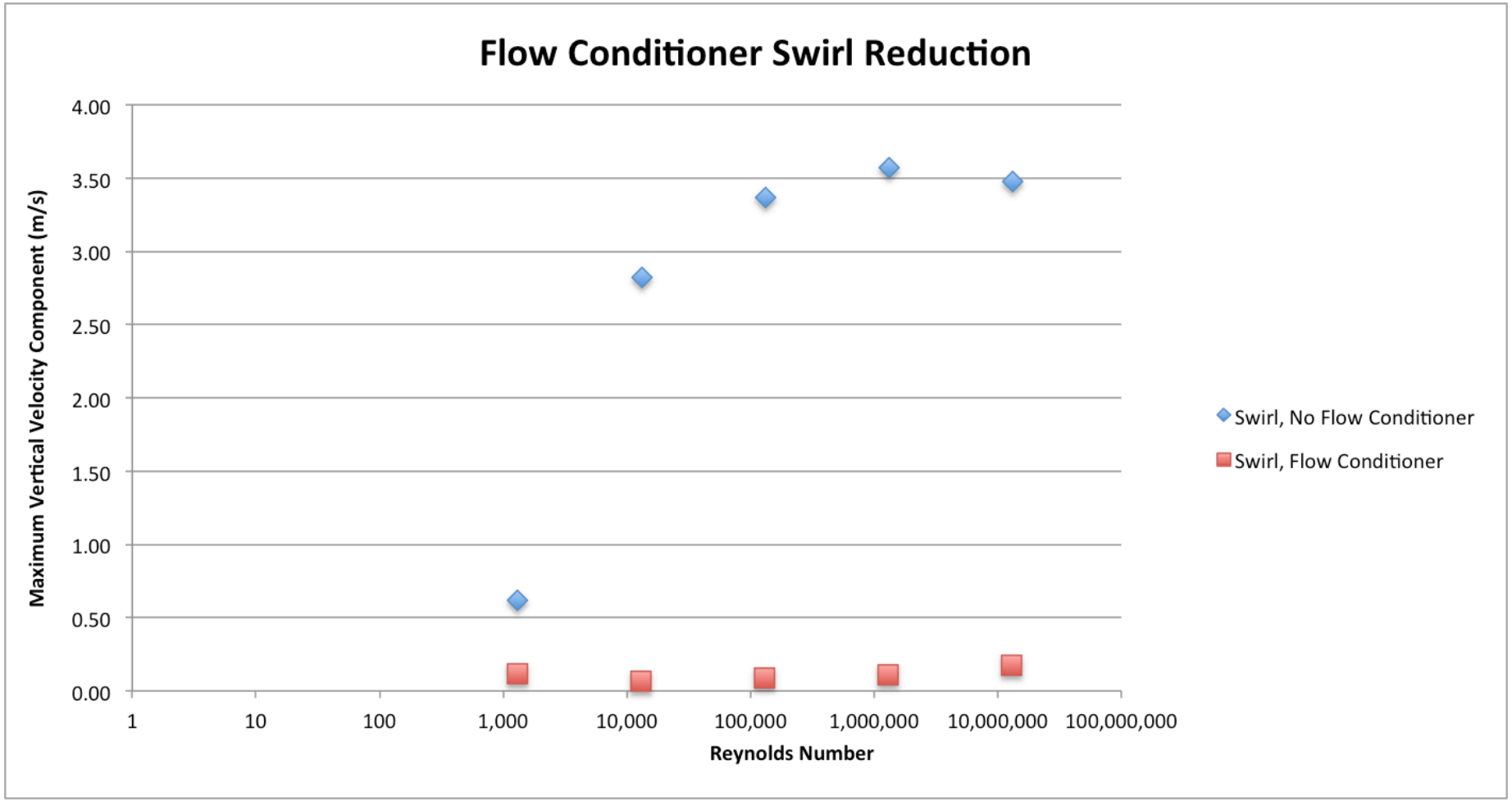

Flow Conditioning Swirl Removal

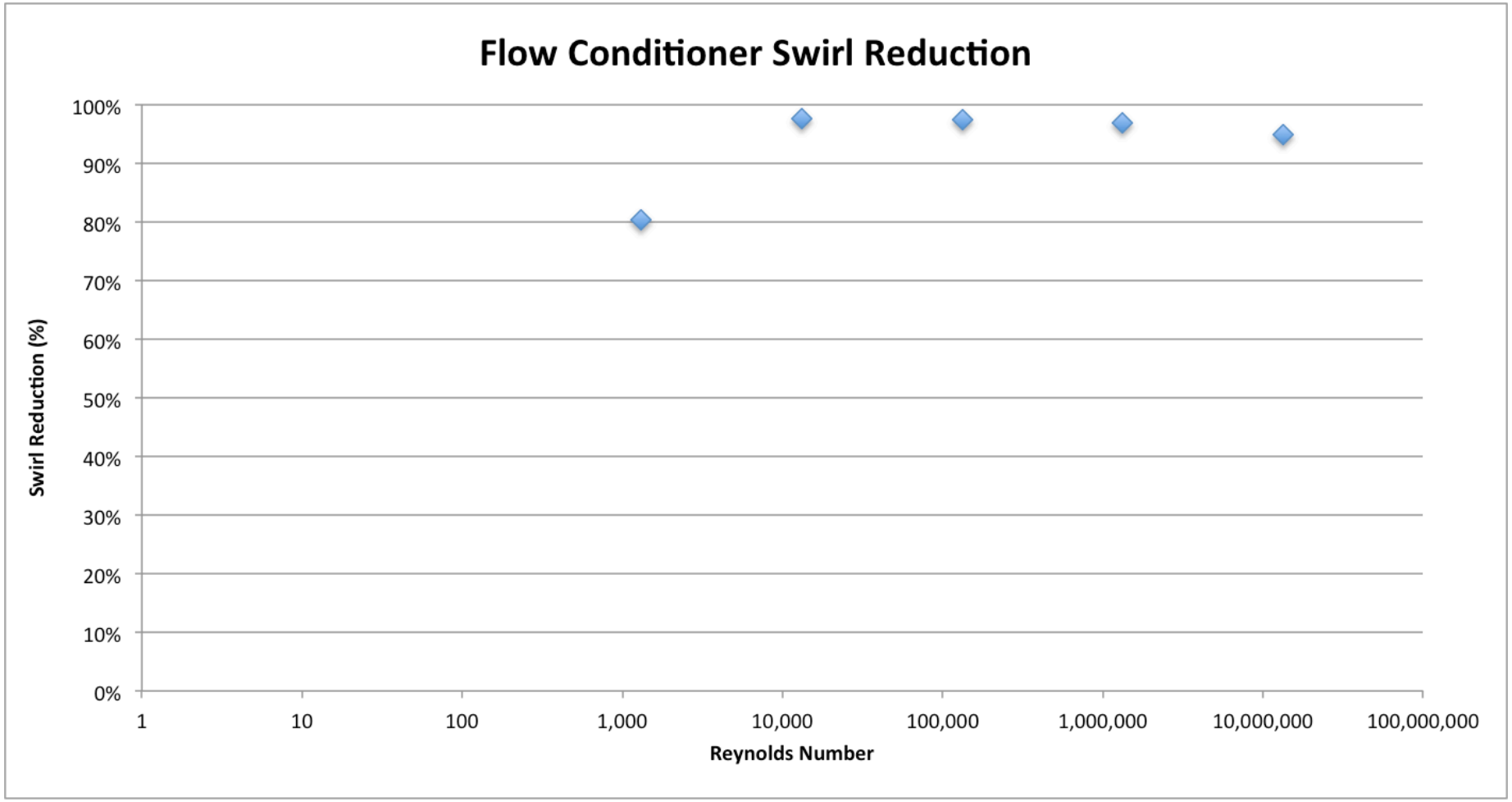

Pressure Drop

- All fittings, obstructions, even pipe itself has a “k factor”.
- The k factor is the pressure loss coefficient for a particular piece of piping.
- It is experimentally determined using the measured pressure drop.

$$\Delta P = \frac{k\rho V^2}{2}$$

- K = Pressure loss coefficient.
- ΔP = Pressure drop across a section of pipe or a fitting.
- ρ = Bulk fluid density, *kg/m³*.
- V = Bulk fluid velocity, *m/s*.

Pressure Drop

- For natural gas applications, most plate flow conditioners have a K factor of approximately 2.
- Tube bundles are closer to 0.75 – 1.5.
- What if we are worried about the pressure drop across the flow conditioner?

Relative Pressure Drop

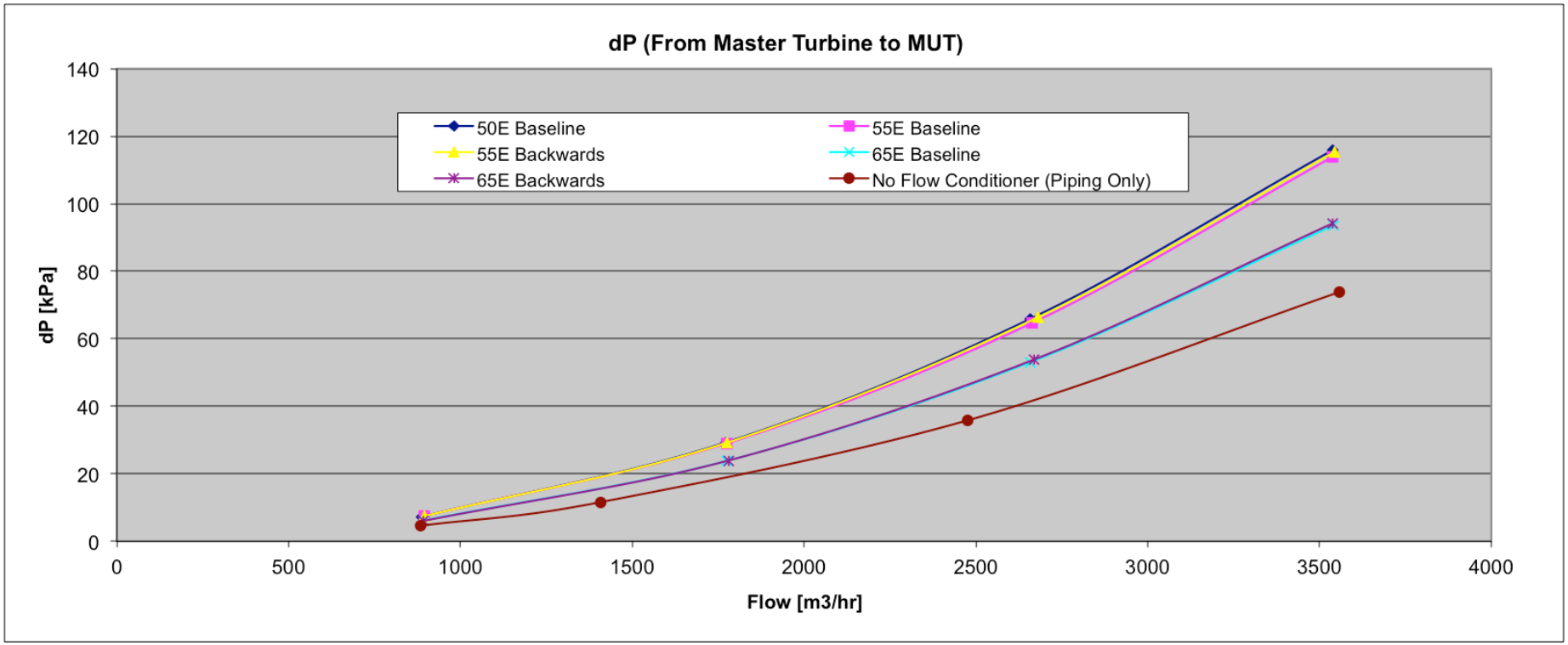

Pressure Drop – Tube Bundle vs Plate FC

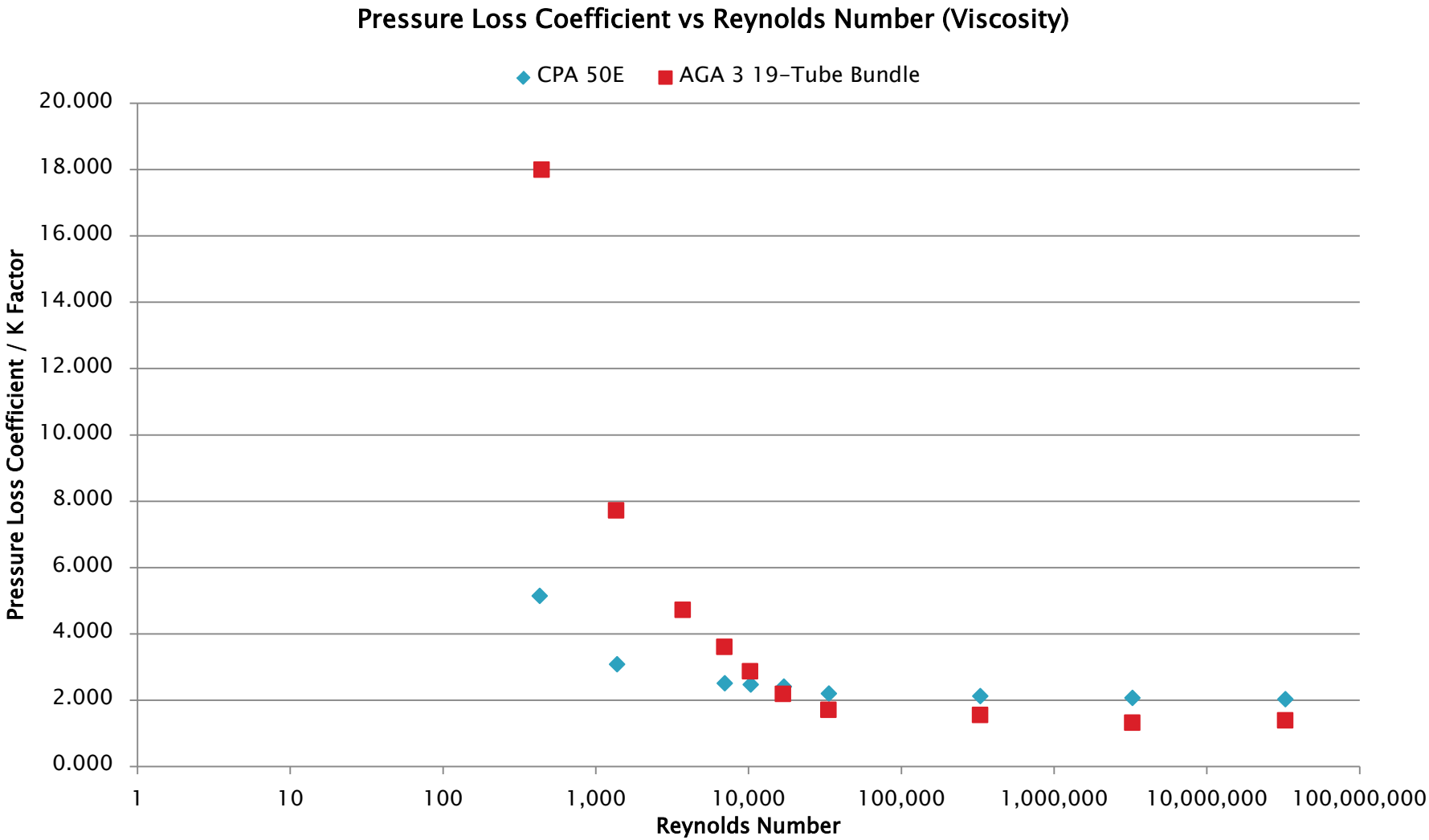

AGA Standards/Meter Run Compliance

- AGA 3 / API 14.3 - Orifice Meter Measurement
- AGA 7 – Turbine Meter Measurement
- AGA 9 – Ultrasonic Meter Measurement
- AGA 11 – Coriolis Meter Measurement

AGA3 Data

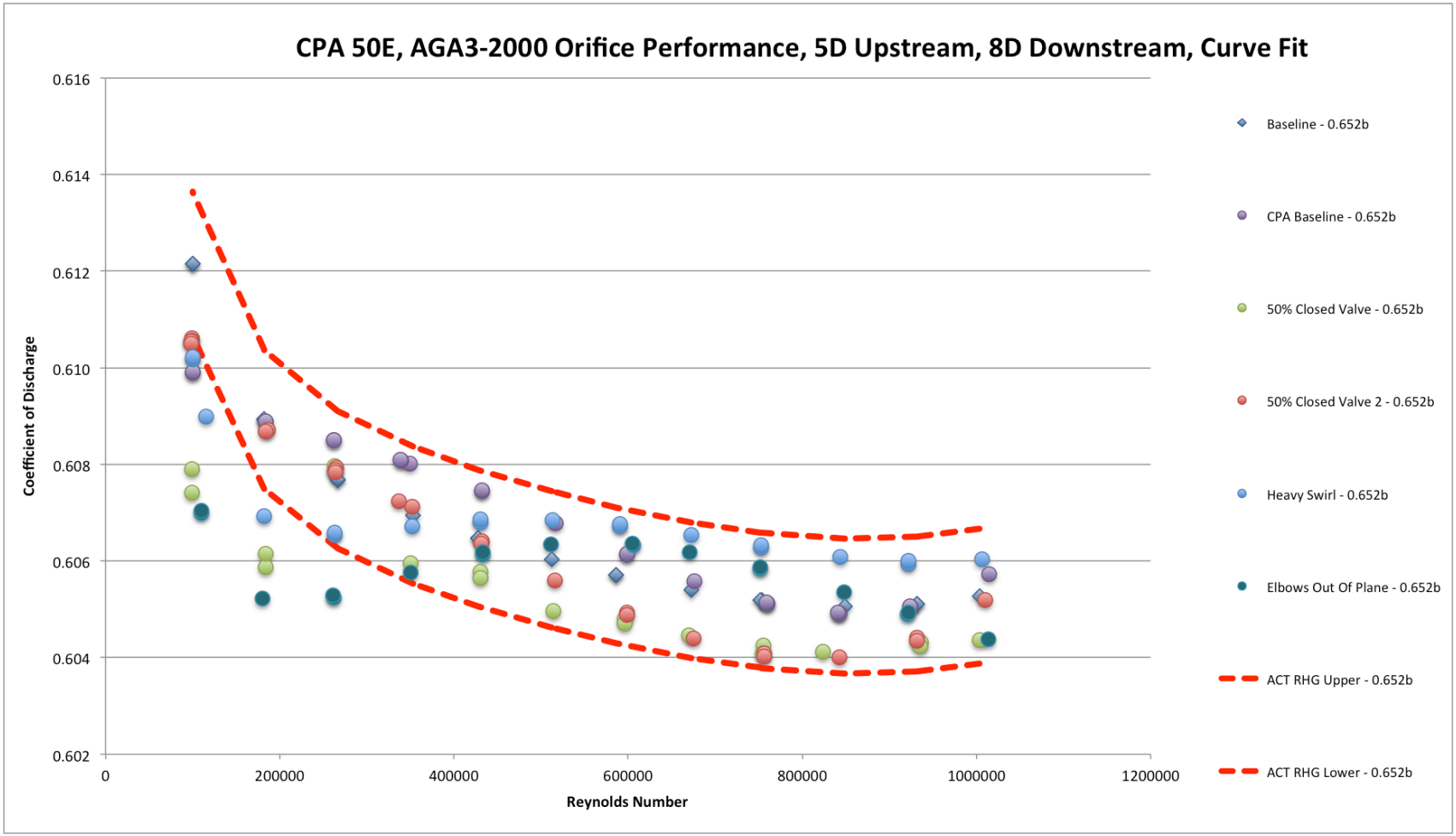
CPA 50E, AGA3-2000 Orifice Performance, 5D Upstream, 8D Downstream, Curve Fit
Coefficient of Discharge
0.616
0.614
0.612
0.610
0.608
0.606
0.604
0.602
0
200000
400000
600000
800000
1000000
1200000
Reynolds Number
Baseline - 0.652b
CPA Baseline - 0.652b
50% Closed Valve - 0.652b
50% Closed Valve 2 - 0.652b
Heavy Swirl - 0.652b
Elbows Out Of Plane - 0.652b
ACT RHG Upper - 0.652b
ACT RHG Lower - 0.652b

AGA9/OIML R137 Data

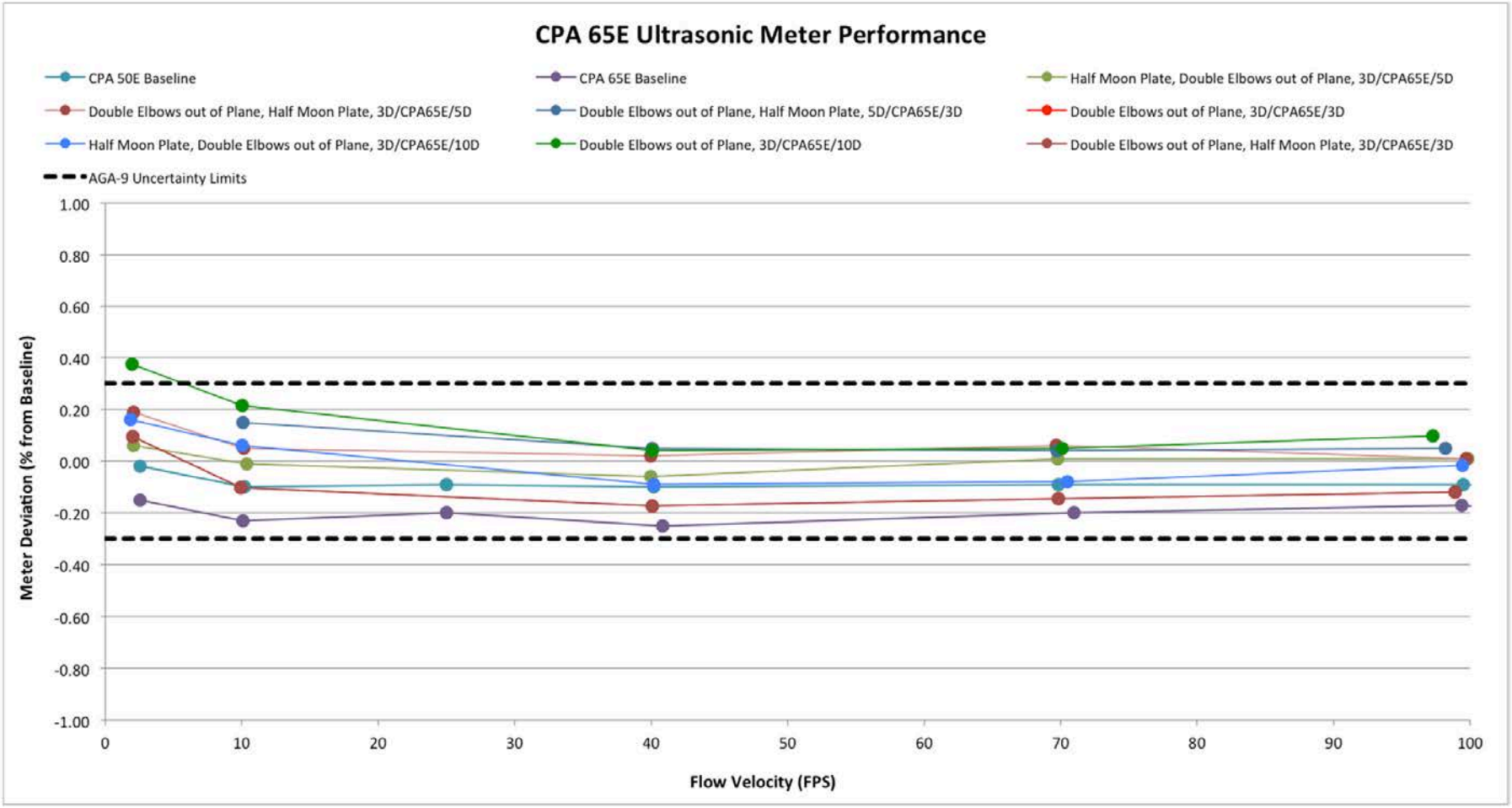

Flow Conditioning Conclusion

- Can eliminate up to 80 – 90% of pipeline swirl.
- Help restore flow profile symmetry and eliminate distortions.
- Isolates the flow meter from upstream disturbances.
- Allows much shorter meter runs to be used with much higher repeatability.
- Are applicable for all liquid or gas flows!

The flow conditioner is merely helping out the meter, providing higher reproducibility and lower uncertainty!

Liquids/Pressure Drop Summary

- All fluid flows will benefit from flow conditioning.
- Flow measurement and flow conditioning in liquids is effectively the same as in gases.
- While we do need to be concerned about pressure drop, we have to look at the big picture; The flow conditioner will not be the most significant obstruction in the pipe.
- When dealing with pressure drop, previous common sense assumptions may not apply. Pressure loses through fittings can be complicated depending on the application.
- In some installations, pressure drop is very helpful. It helps balance meter tubes when multiple runs are used in parallel. Otherwise, severe run hogging and meter run imbalances may be experienced.

Final Thoughts

- Swirl is primarily a function of piping geometry (the size and radius of the piping turns are critical for generating the swirl vector).
- Our attempts to make piping assemblies more compact result in tighter fittings that have a higher chance to produce severe turbulence and dynamic effects (vortex shedding, harmonics).
- Steady state installation effects (flow profiles and swirl) are complex enough, most dynamic behaviors are not well understood and aren't well discussed within corresponding measurement guidelines and standards.
- Try to avoid tight radius tees whenever possible.

Final Thoughts

- Even with the addition of more paths, the addition of a flow conditioner vastly adds to the repeatability and accuracy of a ultrasonic flow meter.
- The flow conditioner can easily cut the errors in half, and in some instances reduce the error by 90%!
- Sometimes we can get lucky and have acceptable performance without a flow conditioner. With measurement repeatability, we need to look at the bigger picture and the general trend of reducing our uncertainty.

Final Thoughts

- The flow conditioner is just making the meter look better.
- Worried about pressure drop? Flow conditioners typically are the lowest dP fitting in a meter run assembly (ie, the accumulation of tees will quickly eclipse the dP of the plate).
- Flow conditioners are recommended for all FLUID applications (liquids and gas)!

Final Thoughts

- Worried about debris plugging up the flow conditioner?
- If there is that much debris in the pipe line, a strainer or filter is heavily recommended.
- Eliminating the flow conditioner will not eliminate the debris, and now you're at risk of breaking off probes and thermowells, damaging control & safety valves, turbines, compressors, etc.
- If the gasket is unraveling, switch to a CGI style gasket with a inner ring. The gasket unraveling is going to create bigger problems than just a plugged flow conditioner (plugged control valves and potential for leaking flanges).

Thank You

- For Further information

www.flowconditioner.com

www.cpacfd.com

Danny Sawchuk

Vice President, Sales & Engineering

danny@cpacl.ca

403.236.4480

403.620.7293